trovaprezzi.it

Questo manuale d'istruzione è fornito da trovaprezzi.it. Scopri tutte le offerte per Little Tikes Playground con Scivolo o cerca il tuo prodotto tra le migliori offerte di Giochi da esterno

little tikes **littletikes.com**

- Catalogue des produits
- Nouveaux jouets
- Service clientèle
- Pièces de rechange
- Concours publicitaire
- Rejoignez notre club

- Catálogo de productos
- Juguetes nuevos
- Servicio al cliente
- Piezas de repuesto
- Sorteos
- Unase a nuestro club

- Product catalog
- New toys
- Customer service
- Replacement parts
- Sweepstakes
- Join our club

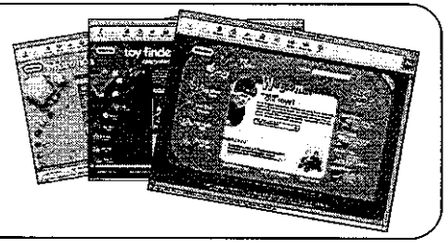

445Z00060

62445A102-4/05

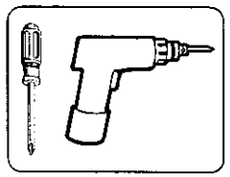

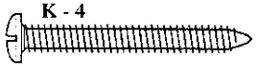

K - 4

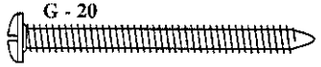

G - 20

O - 8

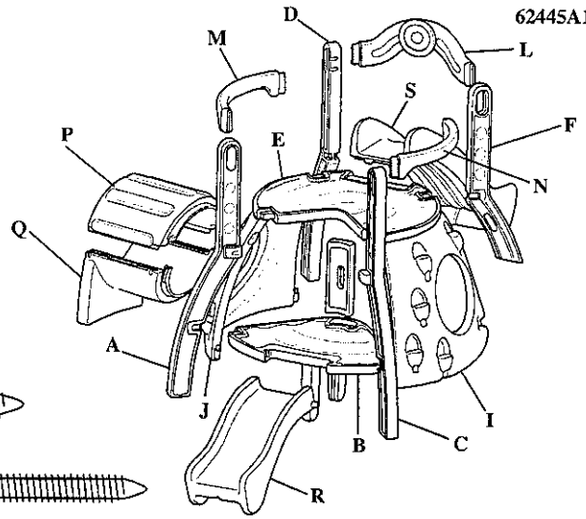

ENGLISH

ENDLESS ADVENTURES™ DOUBLE DECKER SUPER SLIDE™

Ages: 3 - 8 years
Please save sales receipt for proof of purchase.

ADULT ASSEMBLY REQUIRED.

2 people are required for assembly.

⚠ **WARNING:**

- Keep these instructions for future reference.
- Prior to assembly, this package contains small parts; hardware which is a choking hazard and may contain sharp edges and sharp points. Keep away from children until assembled.
- Falls onto hard surfaces could result in head or other serious injuries. Never place on concrete, asphalt, wood, packed earth or other hard surfaces. Carpet over hard floors may not prevent injury. Always use protective surfacing on the ground under and surrounding the playground equipment according to the enclosed "Consumer Information Sheet for Playground Surfacing Materials." Maximum fall height protection up to 6 feet (2m) required.
- Adult supervision required. Do not leave children unattended.
- This product is intended for use by children ages 3 to 8 years.
- Maximum weight per child: 80 lbs. (36 kg). Limit 6 children.
- Shoes must be worn at all times.
- This product is intended for outdoor domestic family use only.

ASSEMBLY HINTS

Illus. 1-3: Attach leg to platform by wiggling leg back and forth until it is seated in the platform opening.
Illus. 9-12: Push down hard on top platform to lock side walls into supports.
Illus 14 & 16: Push down hard on top platform when assembling screws to eliminate any gaps.
Illus. 25: Line up dots on wall and tunnel, as shown.

CAUTION:

- Observing the following statements and warnings reduces the likelihood of serious or fatal injury.
- Place this product on level ground, at least 6' (2 m) away from any object. Objects to be avoided include, but are not limited to, fences, buildings, garages, houses, overhead branches, laundry lines or electrical wires.
- It is recommended that the orientation of the assembled product be such that direct sunlight is minimized on surfaces intended for standing or sitting.
- Instruct children on proper use of this product, only after properly placed, and not in a manner other than intended.
- Do not allow children to climb on product when product is wet.
- Instruct children not to attach items to the product that are not specifically designed for use with the product such as, but not limited to, jump ropes, clotheslines, pet leashes, cables and chains, as they may cause a strangulation hazard.
- Dress children appropriately: avoid loose-fitting clothing such as ponchos, scarves, etc. that are potentially hazardous while using this equipment.

MAINTENANCE

- Check all hardware twice monthly during the usage period and tighten as required. It is particularly important that this procedure be followed at the beginning of each season. If these checks are not carried out, the toy could overturn or otherwise become a hazard. Replacement should be made in accordance with the manufacturer's instructions.
- Take this product indoors or do not use outdoors when temperatures fall below 0°F (-18°C).
- Sand rusted areas on tubular members and repaint using a nonlead-based paint meeting the requirements of 16 CFR Part 1303.

DISPOSAL

- Disassemble and dispose of equipment in such a manner that no hazardous conditions, such as but not limited to, small parts and sharp edges, exist at the time equipment is discarded.

CONSUMER SERVICE
www.littletikes.com
TOLL-FREE NUMBER:

United States:
1-800-321-0183
Monday - Friday
The Little Tikes Company
PO Box 2277
2180 Barlow Road
Hudson, Ohio 44236-0877

United Kingdom:
Little Tikes UK & Ireland
900 Pavilion Drive, First Floor
Northampton NN4 0YR U.K.

Tel: + 44 (0) 800.521558
Monday - Friday 08:30 - 16:45

Fax: + 44 (0) 1604.875800

CE

Printed at U.S.A. D.R.02005 The Little Tikes Company
A Division of *Newell Rubbermaid*

LIMITED WARRANTY

The Little Tikes Company makes fun, high quality toys. We warrant to the original purchaser that this product is free of defects in materials or workmanship for one year * from the date of purchase (dated sales receipt is required for proof of purchase). At the sole election of The Little Tikes Company, the only remedies available under this warranty will be either replacement of the defective part of the product or refund the purchase price of the product. This warranty is valid only if the product has been assembled and maintained per the instructions. This warranty does not cover abuse, accident, cosmetic issues such as fading or scratches from normal wear, or any other cause not arising from defects in material and workmanship.
U.S.A and Canada: For warranty service or replacement part information, please visit our website at www.littletikes.com, call 1-800-321-0183 or write to: Consumer Service, The Little Tikes Company, 2180 Barlow Road, Hudson OH 44236, U.S.A. Some replacement parts may be available for purchase after warranty expires—contact us for details.
Outside U.S.A and Canada: Contact place of purchase for warranty service.
This warranty gives you specific legal rights, and you may also have other rights, which vary from state to state. Some states do not allow the exclusion or limitation of incidental or consequential damages, so the above limitation or exclusion may not apply to you.
*The warranty period is three (3) months for daycare or commercial purchasers.

FRANÇAIS

SUPER TOBOGGAN À DEUX NIVEAUX

Age : 3 à 8 ans
Prière de conserver le reçu comme preuve d'achat.

MONTAGE PAR UN ADULTE REQUIS

Le montage nécessite 2 personnes.

⚠ **ATTENTION :**

- Conserver ces instructions à titre de référence.
- Avant l'assemblage du produit, ce paquet contient des petites pièces de matériel qui peuvent présenter un risque d'étouffement, et des bords et des arrondis tranchants. Tenir hors de portée des enfants avant l'assemblage complet.
- Les chutes sur des surfaces dures peuvent provoquer des blessures à la tête ou d'autres blessures graves. Ne jamais installer l'appareillage sur du ciment, de l'asphalte, de la terre compactée, du bois ou d'autres surfaces dures. De la moquette sur des sols durs n'empêche pas les accidents. Utiliser toujours un revêtement protecteur sur le sol, sous et autour du matériel du terrain de jeux tel que l'indique "la fiche d'information du consommateur sur les matériaux de revêtement de terrain de jeux. Hauteur maximale de protection contre les chutes requise jusqu'à 2 mètre (6 pieds).
- La surveillance par un adulte est recommandée. Ne laisser jamais un enfant sans surveillance.
- Ce produit n'a pas été conçu pour les enfants de 3 - 8 ans.
- Poids maximum par enfant : 36 kg. Limité à 6 enfants.
- Les enfants doivent porter des chaussures.
- Ce produit n'est conçu que pour une utilisation domestique et familiale, à l'extérieur.

CONSEILS D'ASSEMBLAGE

Illustration 1-3 : Fixer le pied à la plateforme en le déplaçant d'avant en arrière pour bien le loger dans l'ouverture de la plateforme.
Illustration 9-12 : Appuyez fermement vers le bas sur la plateforme du haut pour bloquer les murs latéraux dans les supports.
Illustrations 14 et 16 : Appuyez fermement vers le bas sur la plateforme du haut lors du montage des vis pour éliminer tout écart.
Illustration 25 : Alignez les points sur le mur et le tunnel tel qu'illustré.

ATTENTION :

- L'observation des règles et des précautions suivantes diminue les risques d'accidents graves ou mortels.
- Installez ce produit sur un sol nivelé, à une distance d'au moins 2 m (6') de tout objet. Les objets à éviter mais sans s'y limiter sont les barrières, les bâtiments, les garages, les maisons, les branches pendantes, les cordes à linge ou les fils électriques.
- Nous vous recommandons d'orienter le produit assemblé de manière à minimiser l'exposition au soleil des surfaces conçues pour se tenir debout ou s'asseoir.
- Apprendre aux enfants comment utiliser cet appareillage de manière appropriée, seulement après avoir correctement effectué le montage et l'installation. Et non pas d'une manière qui ne correspondrait pas à la fonction de l'appareillage.

1

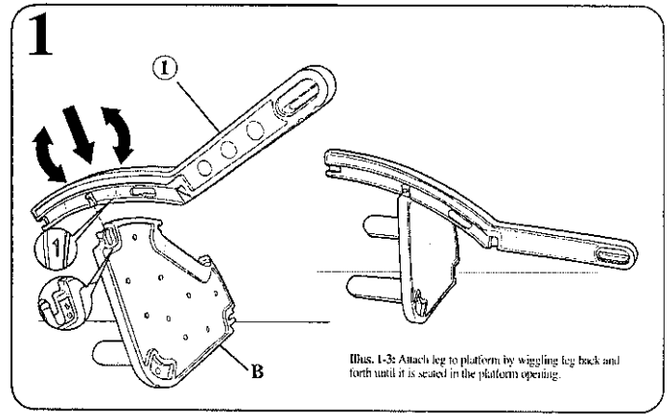

Illus. 1-3: Attach leg to platform by wiggling leg back and forth until it is seated in the platform opening.

2

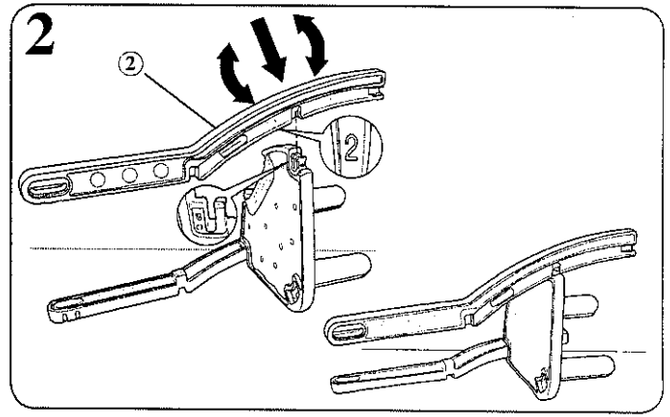

3

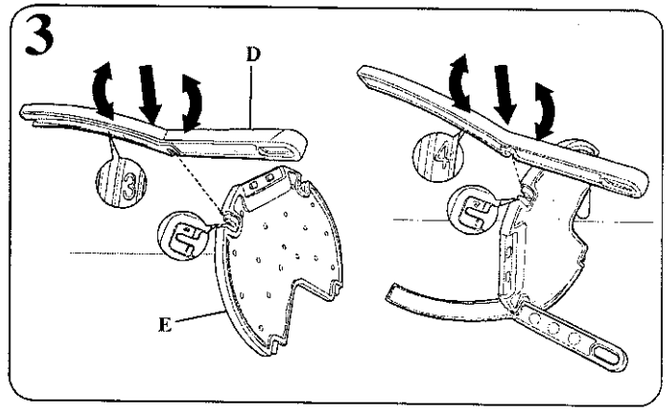

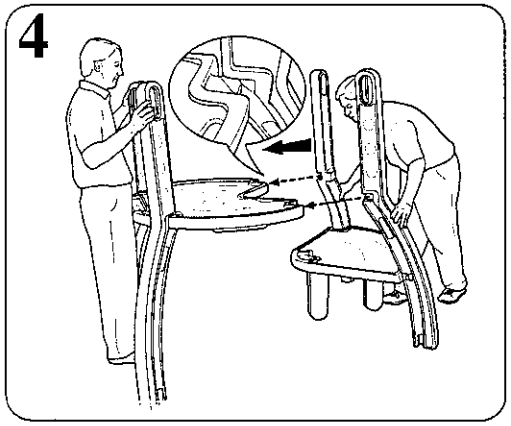

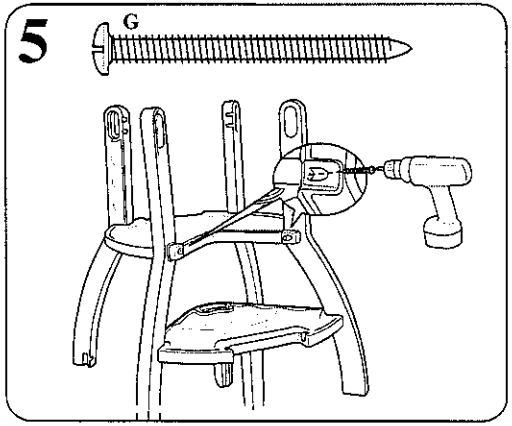

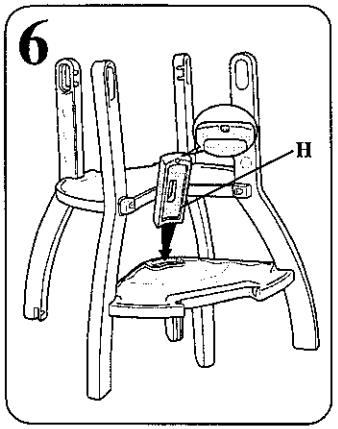

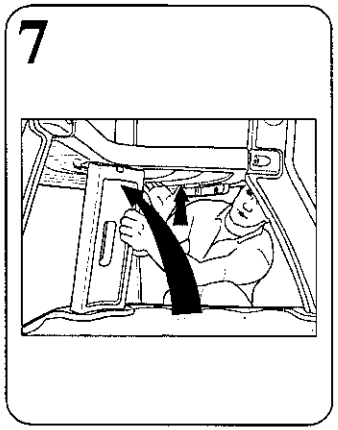

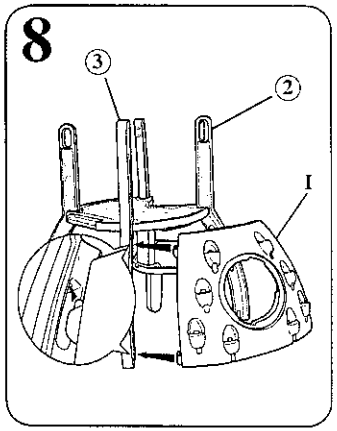

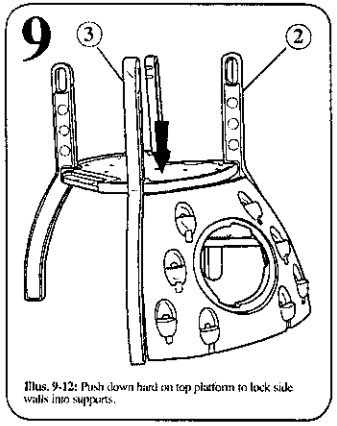

Illus. 9-12: Push down hard on top platform to lock side walls into supports.

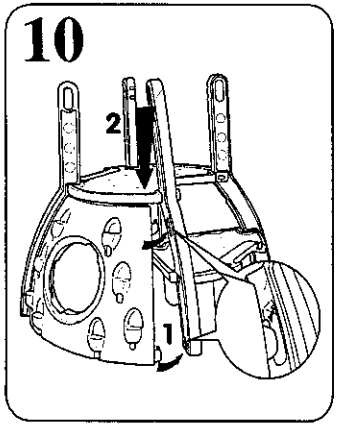

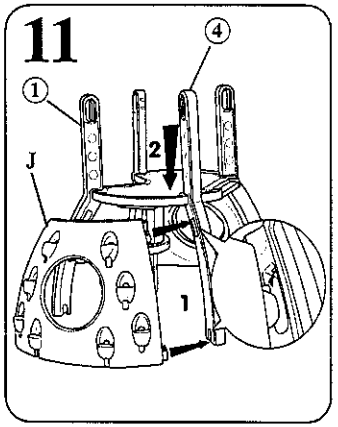

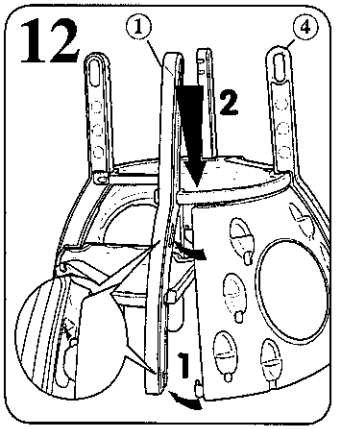

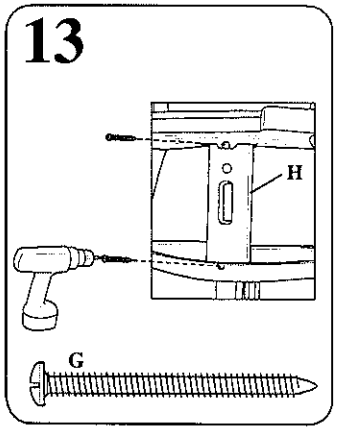

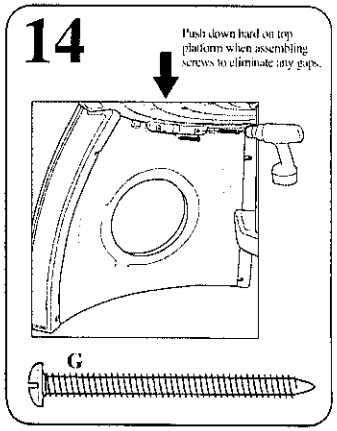

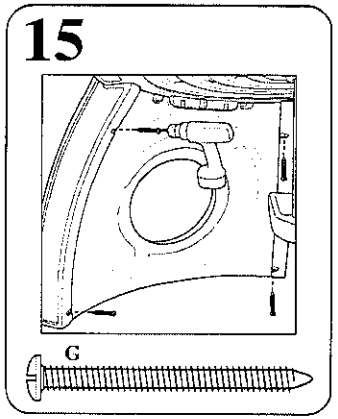

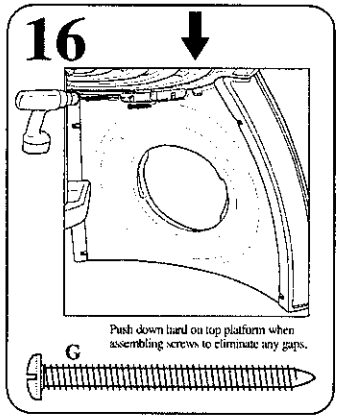

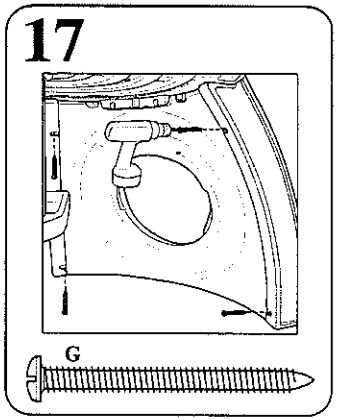

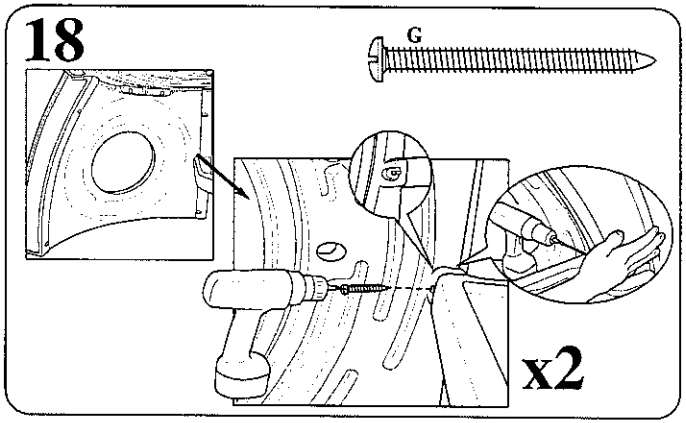

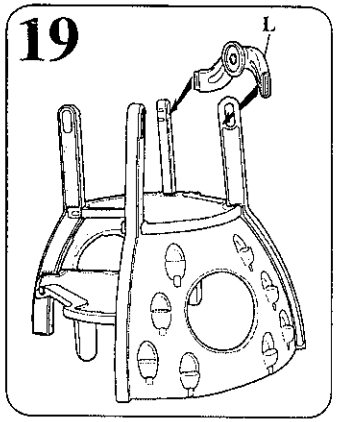

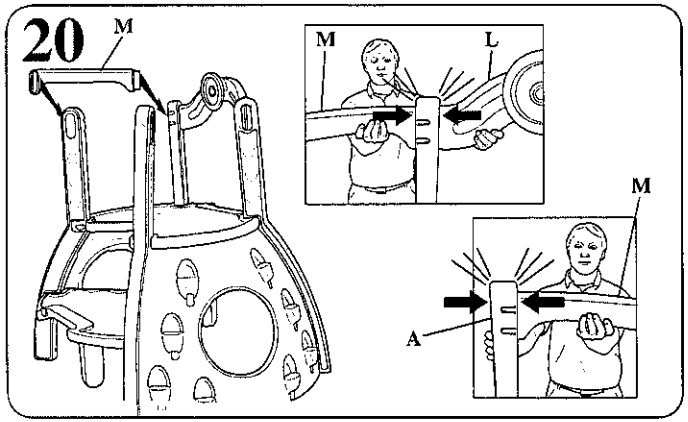

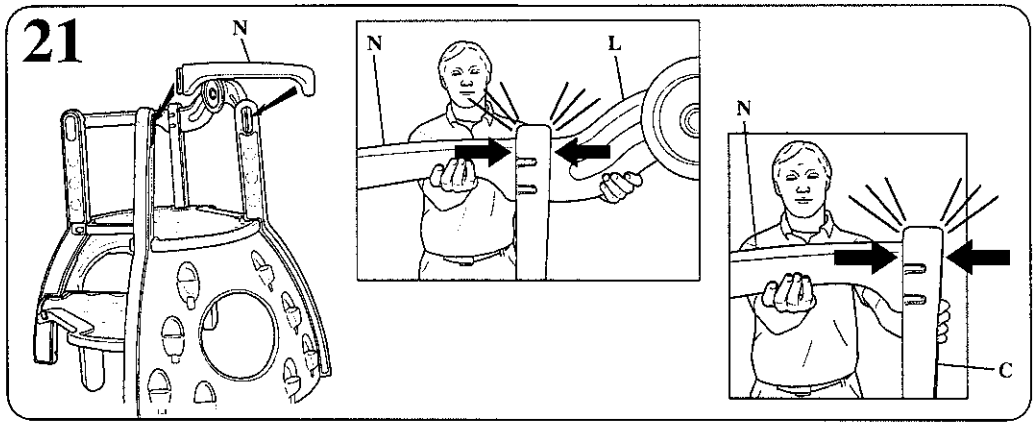

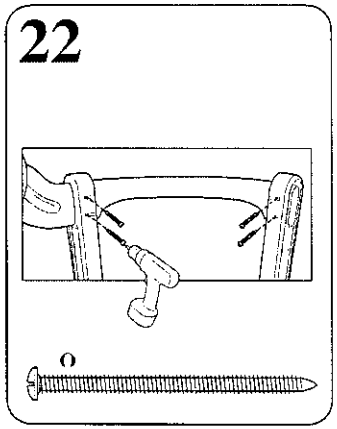

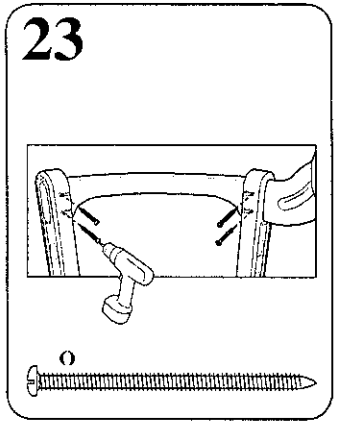

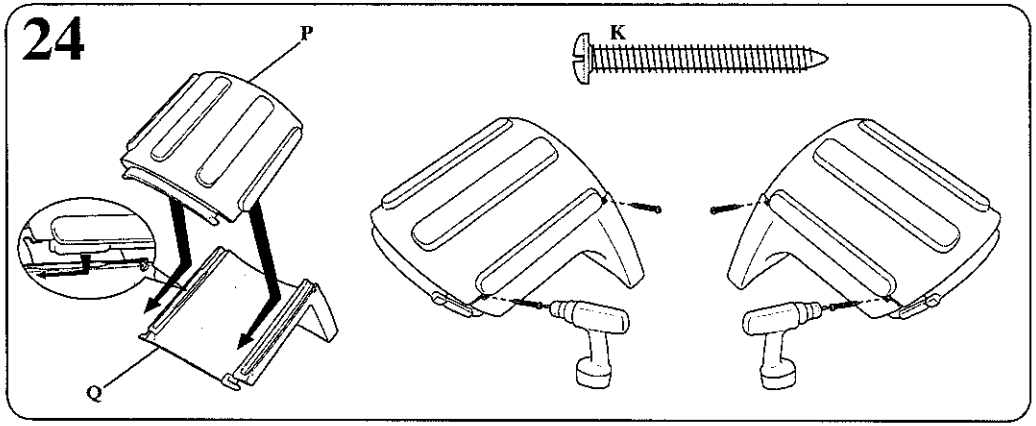

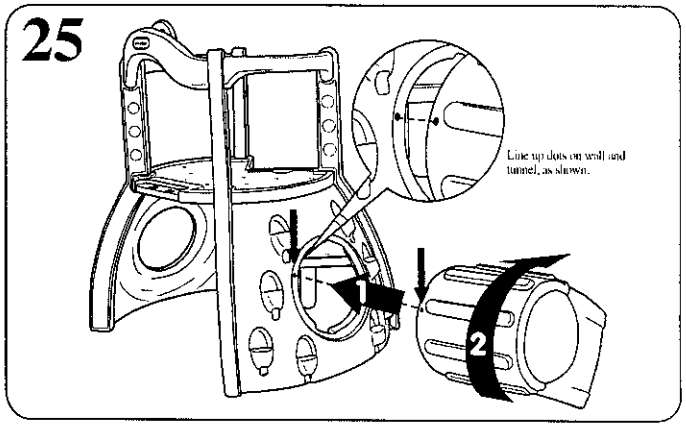

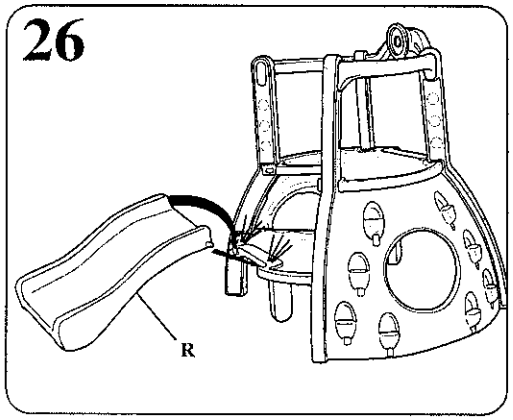

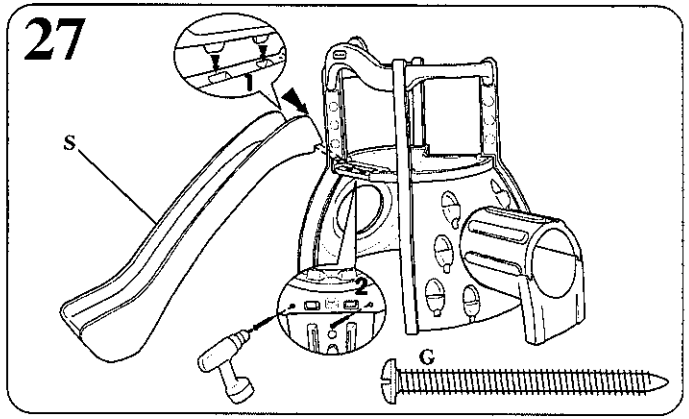

little tikes

62445A203-5/05