Questo manuale d'istruzione è fornito da trovaprezzi.it. Scopri tutte le offerte per D-Link DGS-1520 DGS-1520-28MP o cerca il tuo prodotto tra le migliori offerte di Switch

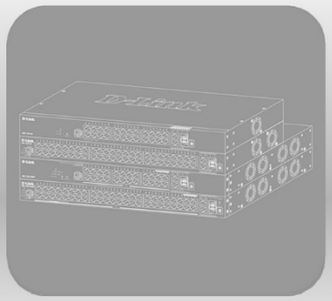

Hardware Installation Guide

Product Model: DGS-1520 Series

Gigabit Ethernet Smart Managed Switch

Release 1.00

Information in this document is subject to change without notice. Reproduction in any manner whatsoever, without the written permission of D-Link Corporation, is strictly forbidden.

Trademarks used in this text: D-Link and the D-LINK logo are trademarks of D-Link Corporation; Microsoft and Windows are registered trademarks of Microsoft Corporation.

Other trademarks and trade names may be used in this document to refer to either the entities claiming the marks and names or their products. D-Link Corporation disclaims any proprietary interest in trademarks and trade names other than its own.

© 2020 D-Link Corporation. All rights reserved.

FCC Compliance Statement

This device complies with Part 15 of the FCC Rules. Operation is subject to the following two conditions: (1) This device may not cause harmful interference, and (2) this device must accept any interference received, including interference that may cause undesired operation.

D-Link Corporate

17595 Mt. Hermann Street

Fountain Valley, CA 92708

(800) 326-1688

CE Mark Warning

This equipment is compliant with Class A of CISPR 32. In a residential environment, this equipment may cause radio interference.

Avertissement Concernant la Marque CE

Cet équipement est conforme à la classe A de la norme CISPR 32. Dans un environnement résidentiel, cet équipement peut provoquer des interférences radio.

VCCI Warning

この装置は、クラス A 機器です。この装置を住宅環境で使用すると電波妨害を引き起こすことがあります。この場合には使用者が適切な対策を講ずるよう要求されることがあります。 VCCI-A

BSMI Notice

此為甲類資訊技術設備，於居住環境中使用時，可能會造成射頻擾動，在此種情況下，使用者會被要求採取某些適當的對策。

Safety Compliance

Warning: Class 1 Laser Product: When using a fiber optic media expansion module, never look at the transmit laser while it is powered on. In addition, never look directly at the fiber TX port and fiber cable ends when they are powered on.

Avertissement: Produit Laser de Classe 1: Ne regardez jamais le laser tant qu'il est sous tension. Ne regardez jamais directement le port TX (Transmission) à fibres optiques et les embouts de câbles à fibres optiques tant qu'ils sont sous tension.

Table of Contents

Intended Readers v
Typographical Conventions v
Notes and Cautions v

1. Introduction 1
Switch Description 1
Package Contents 1

2. Hardware Components 2
Front Panel Components 2
Front Panel LED Indicators 4
Rear Panel Components 6
Rear Panel LED Indicators 8
Side Panel Components 9
Smart Fans 10

3. Installation 11
Installation Guidelines 11
Installing the Switch without a Rack 11
Installing the Switch in a Standard 19" Rack 12
Installing Transceivers into the Transceiver Ports 13
Connecting AC Power to the Switch 14
Installing the AC Power Cord Retainer 14
Connecting PoH to the Switch 17
Installing the Redundant Power Supply (RPS) 18
Connecting the DPS-700 RPS to the Switch 18

4. Switch Connections 20
Stacking the Switch 20
Switch to Switch 23
Switch to Server 24
Switch to End Node 24

5. Switch Management 25
Management Options 25
Command Line Interface (CLI) 25
Connecting to the Console Port 25
Logging into the CLI 26
Creating a User Account 26
Configuring the IP Address 26
Web User Interface (Web UI) 27
Connecting to the Web UI 27
Logging into the Web UI 27
Web Interface Navigation 28
SNMP-based Management 29
Connecting using SNMP 29
Traps 29
Management Information Base (MIB) 29

Appendix A - Technical Specifications 30

Appendix B - Cables and Connectors 35
Ethernet Cable 35
Console Cable 36

Redundant Power Supply (RPS) Cable 37
Appendix C - ERPS Information 38
Safety/Sécurité 39
Safety Instructions 39
Safety Cautions 39
Consignes de sécurité 40
Précautions de sécurité 40
General Precautions for Rack-Mountable Products 42
Protecting Against Electrostatic Discharge 43
Warranty & Technical Support 44

Intended Readers

The DGS-1520 Series Gigabit Ethernet Smart Managed Switch Hardware Installation Guide contains detailed information about the hardware specifications of the switches in this series. It also contains brief information on how to configure and manage a switch in this series. This manual is intended for advanced level users that are familiar with network management concepts and terminology.

Typographical Conventions

Convention	Description
Boldface Font	This convention is used to place emphasis on keywords. It also indicates a button, toolbar icon, menu, menu item, system message, or a prompt appearing on the screen. For example, click the **Apply** button.
Initial capital letter	This convention is used to indicate a window name or keyboard key. For example, press the Enter key.
`Blue Courier Font`	This convention is used to represent a CLI example.

Notes and Cautions

NOTE: A note indicates important information that helps you make better use of your device.

CAUTION: A caution indicates a potential for property damage, personal injury, or death.

ATTENTION: Une précaution indique un risque de dommage matériel, de blessure corporelle ou de mort.

1. Introduction

Switch Description
Package Contents

Switch Description

The DGS-1520 series is the latest next generation of Smart Managed switches from D-Link. Switches in this series feature a wide selection of different ports types and speeds that can be used to interconnect a variety of networking devices to communicate with each other. The SFP+ ports, with fiber-optical cabling, can be used to uplink connections that may span over great distances. Switches in this series also implement D-Link's innovative third generation Green Ethernet technology (IEEE 802.3az) to save power from links that are inactive by turning LEDs off based on a customized schedule and by allowing ports to enter a hibernated state automatically.

In the **DGS-1520 Series**, the following switches are available: **DGS-1520-28**, **DGS-1520-28MP**, **DGS-1520-52**, and **DGS-1520-52MP**. Some features, throughout this guide, will apply to all the switches within the DGS-1520 Series. When referring to these universal features, we will simply refer to the product as the *Switch*.

Package Contents

Open the shipping carton of the Switch and carefully unpack its contents. The carton should contain the following items:

- One DGS-1520 series switch
- One AC power cord
- One AC power cord retainer set
- One console cable (RJ45 to RS-232)
- Four rubber feet with adhesive backing
- One rack mounting kit, containing two brackets and a number of screws
- One quick installation guide

NOTE: If any item is missing or damaged, please contact your local D-Link reseller for replacement.

2. Hardware Components

Front Panel Components
Rear Panel Components
Side Panel Components

Front Panel Components

The front panel features components like LED indicators, a reset button, a Console port, and a variety of Ethernet ports. These components are described in detail below.

This following table lists the front panel components on **all** the switches in the series:

Port	Description
Reset Button	The reset button is used to reboot the switch or to reset the switch to its factory default settings depending on how long this button is pressed. • **Press and hold for less than 5 seconds** - This reboots the Switch. All unsaved configurations will be lost. • **Press and hold for between 5 and 10 seconds** - This reboots the Switch and restarts the ZTP function. All unsaved configurations will be lost. • **Press and hold for more than 10 seconds** - This resets the software configuration on the Switch to the factory default settings.
Console Port	The console port is used to connect to the CLI of the switch. The connection is out-of-band and the console cable (included in the package) must be used for the connection.

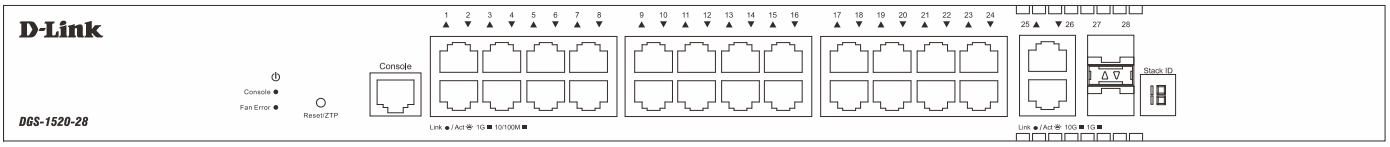

Figure 2-1 DGS-1520-28 Front Panel

This following table lists the front panel components unique to the **DGS-1520-28**:

Port Type	Port Number	Description
RJ45 Port *(10/100/1000 Mbps)*	*Ports 1 to 24*	This switch is equipped with **24** RJ45 Ethernet ports that can operate at 10 Mbps, 100 Mbps, and 1 Gbps wire-speeds.
RJ45 Port *(1/10 Gbps)*	*Ports 25 to 26*	This switch is equipped with **2** RJ45 Ethernet ports that can operate at 1 Gbps and 10 Gbps wire-speeds.
SFP+ Ports *(1/10 Gbps)*	*Ports 27 to 28*	This switch is equipped with **2** SFP/SFP+ ports that can operate at 1 Gbps and 10 Gbps wire-speeds and support a wide collection of SFP/SFP+ transceivers.

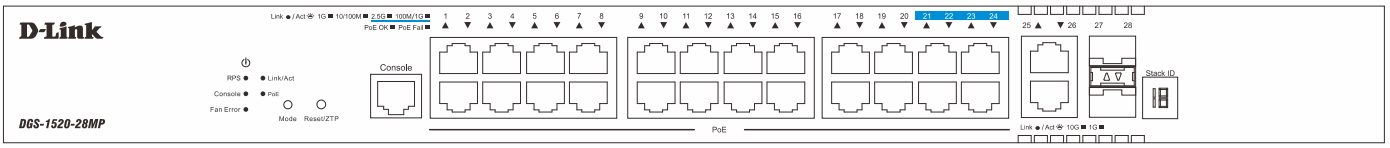

Figure 2-2 DGS-1520-28MP Front Panel

This following table lists the front panel components unique to the **DGS-1520-28MP**:

Port Type	Port Number	Description
RJ45 PoE Port *(10/100/1000 Mbps)*	*Ports 1 to 20*	This switch is equipped with **20** RJ45 PoE ports that can operate at 10 Mbps, 100 Mbps, and 1 Gbps wire-speeds and supply IEEE 802.3af/at power to PDs.
RJ45 PoE Port *(100/1000/2500 Mbps)*	*Ports 21 to 24*	This switch is equipped with **4** RJ45 PoE ports that can operate at 100 Mbps, 1 Gbps, and 2.5 Gbps wire-speeds and supply IEEE 802.3af/at power to PDs.
RJ45 Port *(1/10 Gbps)*	*Ports 25 to 26*	This switch is equipped with **2** RJ45 Ethernet ports that can operate at 1 Gbps and 10 Gbps wire-speeds.
SFP+ Ports *(1/10 Gbps)*	*Ports 27 to 28*	This switch is equipped with **2** SFP/SFP+ ports that can operate at 1 Gbps and 10 Gbps wire-speeds and support a wide collection of SFP/SFP+ transceivers.

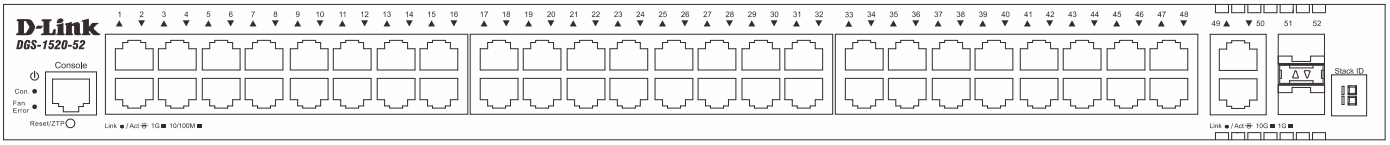

Figure 2-3 DGS-1520-52 Front Panel

This following table lists the front panel components unique to the **DGS-1520-52**:

Port Type	Port Number	Description
RJ45 Port *(10/100/1000 Mbps)*	*Ports 1 to 48*	This switch is equipped with **48** RJ45 Ethernet ports that can operate at 10 Mbps, 100 Mbps, and 1 Gbps wire-speeds.
RJ45 Port *(1/10 Gbps)*	*Ports 49 to 50*	This switch is equipped with **2** RJ45 Ethernet ports that can operate at 1 Gbps and 10 Gbps wire-speeds.
SFP+ Ports *(1/10 Gbps)*	*Ports 51 to 52*	This switch is equipped with **2** SFP/SFP+ ports that can operate at 1 Gbps and 10 Gbps wire-speeds and support a wide collection of SFP/SFP+ transceivers.

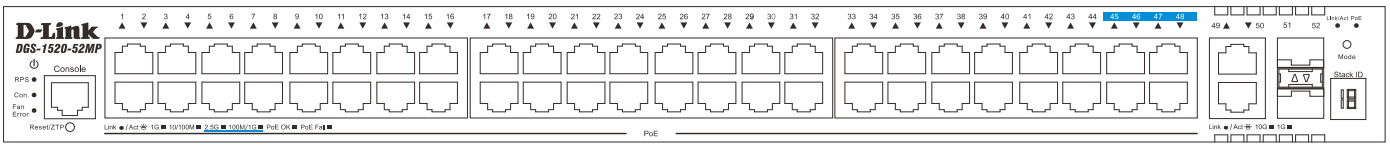

Figure 2-4 DGS-1520-52MP Front Panel

This following table lists the front panel components unique to the **DGS-1520-52MP**:

Port Type	Port Number	Description
RJ45 PoE Port *(10/100/1000 Mbps)*	*Ports 1 to 44*	This switch is equipped with **44** RJ45 PoE ports that can operate at 10 Mbps, 100 Mbps, and 1 Gbps wire-speeds and supply IEEE 802.3af/at power to PDs.
RJ45 PoE Port *(100/1000/2500 Mbps)*	*Ports 45 to 48*	This switch is equipped with **4** RJ45 PoE ports that can operate at 100 Mbps, 1 Gbps, and 2.5 Gbps wire-speeds and supply IEEE 802.3af/at power to PDs.
RJ45 Port *(1/10 Gbps)*	*Ports 49 to 50*	This switch is equipped with **2** RJ45 Ethernet ports that can operate at 1 Gbps and 10 Gbps wire-speeds.

Port Type	Port Number	Description
SFP+ Ports *(1/10 Gbps)*	*Ports 51 to 52*	This switch is equipped with **2** SFP/SFP+ ports that can operate at 1 Gbps and 10 Gbps wire-speeds and support a wide collection of SFP/SFP+ transceivers.

Front Panel LED Indicators

The LED indicators provide valuable information in a variety of ways like their color, blinking times, and location.

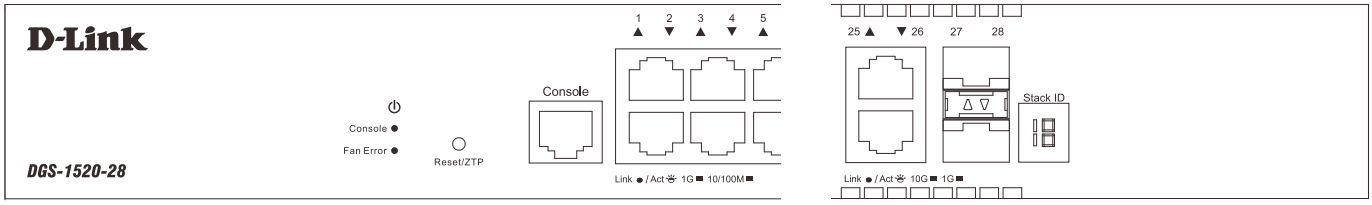

Figure 2-5 DGS-1520-28 Front Panel LED Indicators

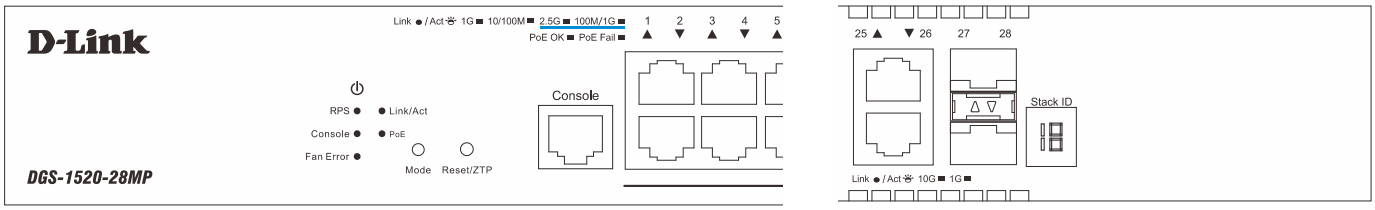

Figure 2-6 DGS-1520-28MP Front Panel LED Indicators

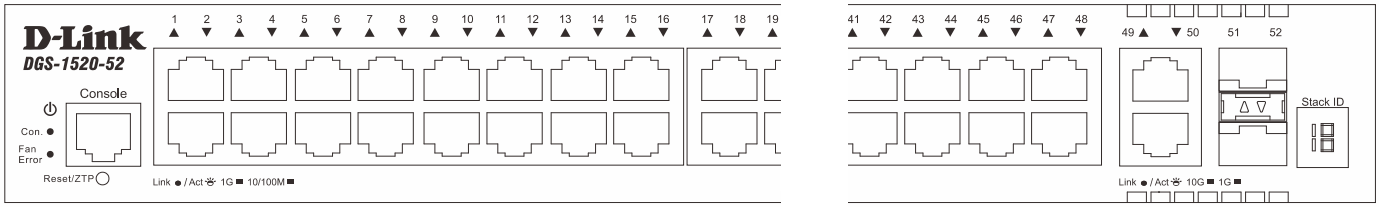

Figure 2-7 DGS-1520-52 Front Panel LED Indicators

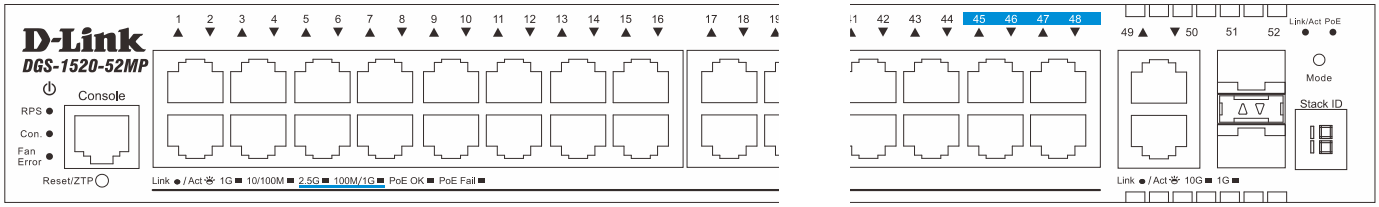

Figure 2-8 DGS-1520-52MP Front Panel LED Indicators

The front panel LED indicators (**per device**) are described in the following table:

LED	Color	Status	Description
Power	Green	On (Solid)	Power on
		On (Blinking)	Performing system self-test
		Off	Power off
RPS *(PoE Switches Only)*	Green	On (Solid)	RPS on
		Off	RPS off
Console	Green	On (Solid)	Console session is active (user logged in)
		Off	Console session is inactive (user logged out)

LED	Color	Status	Description
Fan Error	Green	On (Solid)	Normal operation (diagnostics test passed)
	Red	On (Solid)	Fan off (due to fan runtime failure)
Link/Act Mode *(PoE Switches Only)*	Green	On (Solid)	Link/Act/Speed mode selected (via **Mode** button)
		Off	PoE mode selected (via **Mode** button)
PoE Mode *(PoE Switches Only)*	Green	On (Solid)	PoE mode selected (via **Mode** button)
		Off	Link/Act/Speed mode selected (via **Mode** button)
Stack ID *(7-segment LED)*	Green	On (Solid) **1** to **8**	The stacking ID number of the switch in the stack
		On (Solid) **H**	The switch is the master switch in the stack
		On (Solid) **h**	The switch is the backup master switch in the stack
		On (Solid) **e**	There was an error in the system's self-test
		On (Solid) **G**	The Safeguard engine entered the exhausted mode

The front panel LED indicators (**per RJ45 port**) are described in the following table:

LED	Color	Status	Description
Link/Act *(1G, 10/100M)* *(top of each port)*	Green	On (Solid)	Active connection at 1 Gbps through the port
		On (Blinking)	Data transmitted and received through the port
	Amber	On (Solid)	Active connection at 10/100 Mbps through the port
		On (Blinking)	Data transmitted and received through the port
	Off	Off	Inactive connection or no link present
Link/Act *(2.5G, 100M/1G)* *(PoE Switches Only)* *(top of each port)*	Green	On (Solid)	Active connection at 2.5 Gbps through the port
		On (Blinking)	Data transmitted and received through the port
	Amber	On (Solid)	Active connection at 100 Mbps or 1 Gbps through port
		On (Blinking)	Data transmitted and received through the port
	Off	Off	Inactive connection or no link present
Link/Act *(10G, 1G)* *(top of each port)*	Green	On (Solid)	Active connection at 10 Gbps through the port
		On (Blinking)	Data transmitted and received through the port
	Amber	On (Solid)	Active connection at 1 Gbps through the port
		On (Blinking)	Data transmitted and received through the port
	Off	Off	Inactive connection or no link present
PoE OK/Fail *(PoE Switches Only)* *(top of each port)*	Green	On (Solid)	Power being supplied to PD through the port
	Amber	On (Solid)	An error condition is occurring
	Off	Off	No power being supplied through the port

The front panel LED indicators (**per SFP+ port**) are described in the following table:

LED	Color	Status	Description
Link/Act *(top of each port)*	Green	On (Solid)	Active connection at 10 Gbps through the port
		On (Blinking)	Data transmitted and received through the port
	Amber	On (Solid)	Active connection at 1 Gbps through the port
		On (Blinking)	Data transmitted and received through the port
	Off	Off	Link down or no link

The behavior of the LEDs during the booting or rebooting process is described in the following table:

Switch	LED(s)	Behavior
DGS-1520-28 **DGS-1520-52**	**Power LED**	Blinks green when the switch is powered on. Then, lights solid green until the system is ready.
	Console LED	Lights solid green when the switch is powered on. Then, returns to normal operation when the system is ready.
	Fan LED	Lights solid green when the switch is powered on. Then, returns to normal operation when the system is ready.
	Stacking LED	Lights solid green when the switch is powered on. Then, returns to normal operation when the system is ready.
	Link/Act LEDs	Light solid green and amber when the switch is powered on. Then, blinks green until the system is ready.
DGS-1520-28MP **DGS-1520-52MP**	**Power LED**	Blinks green when the switch is powered on. Then, lights solid green until the system is ready.
	Console LED	Lights solid green when the switch is powered on. Then, returns to normal operation when the system is ready.
	Fan LED	Lights solid green when the switch is powered on. Then, returns to normal operation when the system is ready.
	Stacking LED	Lights solid green when the switch is powered on. Then, returns to normal operation when the system is ready.
	Link/Act Mode LED	Lights solid green when the switch is powered on. Then, returns to normal operation when the system is ready.
	Link/Act LEDs	Light solid green and amber when the switch is powered on. Then, blinks green until the system is ready.

Rear Panel Components

The rear panel features components like an AC power socket, a security lock, an electrical ground point, and more. These components are described in detail below.

This following table lists the front panel components on **all** the switches in the series:

Port	Description
AC Power Connector	The AC power cord (included in the package) can be plugged into this receptacle to supply the switch with 100-240 VAC power at 50-60 Hz.
Power Cord Retainer Hole	The power cord retainer hole is used to insert the power cord retainer to secure the AC power cord.
Switch GND	Use an electrical grounding wire and connect one end of the wire to the switch GND and the other end of the wire to an electrical grounding point most commonly found on the Switch mounting rack itself.
Security Lock	The Kensington-compatible security lock can be used to connect the Switch to a secure immovable device. Insert the lock into the notch and turn the key to secure the lock. The lock-and-cable apparatus should be purchased separately.

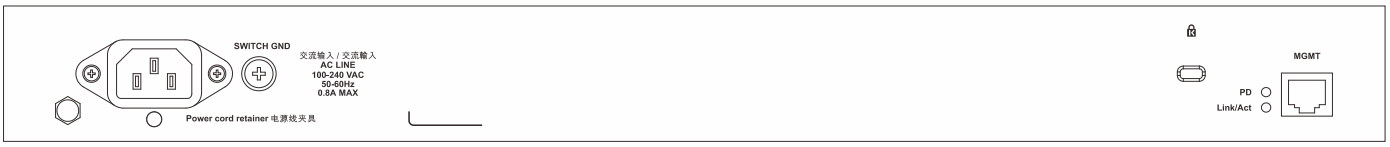

Figure 2-9 DGS-1520-28 Rear Panel

This following table lists the front panel components unique to the **DGS-1520-28**:

Port	Description
MGMT Port *(PoH IN Port)*	The RJ45 Management (MGMT) port is an IP-based, Out-Of-Band (OOB) port for Telnet, Web, or SNMP management that operates at 10/100/1000 Mbps wire-speed. This port can be used to configure the Switch without being connected to the network. The MGMT port can also be used to supply the Switch with 90W DC power using Power over HDBaseT. This can be used as the main power source or as the secondary power source to the Switch.

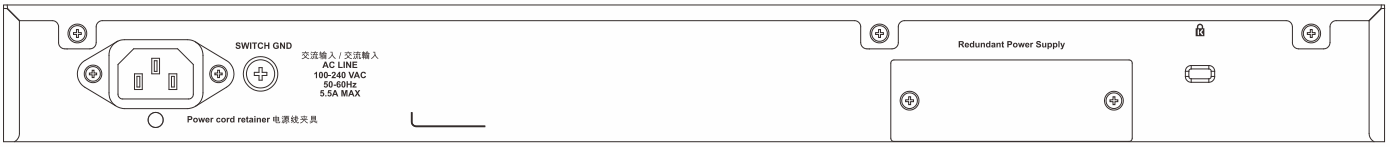

Figure 2-10 DGS-1520-28MP Rear Panel

This following table lists the front panel components unique to the **DGS-1520-28MP**:

Port	Description
Redundant Power Supply	The RPS port can be used to connect an optional external load-sharing RPS to the Switch. When the internal power fails, the external RPS will immediately supply power to the Switch automatically.

Figure 2-11 DGS-1520-52 Rear Panel

This following table lists the front panel components unique to the **DGS-1520-52**:

Port	Description
MGMT Port *(PoH IN Port)*	The RJ45 Management (MGMT) port is an IP-based, Out-Of-Band (OOB) port for Telnet, Web, or SNMP management that operates at 10/100/1000 Mbps wire-speed. This port can be used to configure the Switch without being connected to the network. The MGMT port can also be used to supply the Switch with 90W DC power using Power over HDBaseT. This can be used as the main power source or as the secondary power source to the Switch.

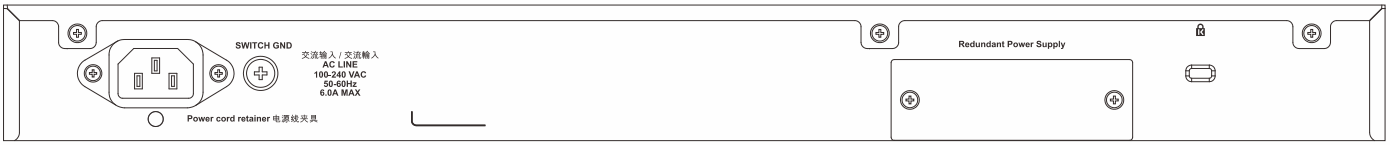

Figure 2-12 DGS-1520-52MP Rear Panel

This following table lists the front panel components unique to the **DGS-1520-52MP**:

Port	Description
Redundant Power Supply	The RPS port can be used to connect an optional external load-sharing RPS to the Switch. When the internal power fails, the external RPS will immediately supply power to the Switch automatically.

Rear Panel LED Indicators

The rear panel LED indicators provide valuable information in a variety of ways like their color, blinking times, and location.

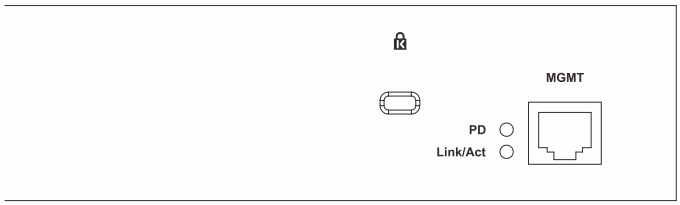

Figure 2-13 DGS-1520-28/52 Rear Panel LED Indicators

The rear panel LED indicators (**per device**) are described in the following table:

LED	Color	Status	Description
Link/Act	Green	On (Solid)	Active connection at 1 Gbps through the MGMT port
		On (Blinking)	Data transmitted and received through the MGMT port
	Amber	On (Solid)	Active connection at 10/100 Mbps through the MGMT port
		On (Blinking)	Data transmitted and received through the MGMT port
	Off	Off	Inactive connection or no link present
PD	Green	On (Solid)	Receiving DC power from PoH PSE connected to the MGMT port
	Amber	On (Solid)	Normal MGMT connection active (no PoH supplied). When a PSE is connected, this light indicates that a power supply failure has occurred.
	Off	Off	No PoH PSE or MGMT connection is present

Side Panel Components

The side panels feature components like heat vents, fans, and rack-mounting screw holes. These components are described in detail below. The heat vents are used to dissipate internal heat and facilitate internal air circulation.

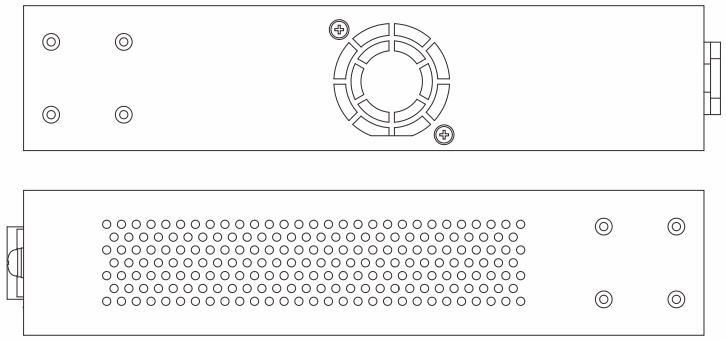

Figure 2-14 DGS-1520-28 Side Panels

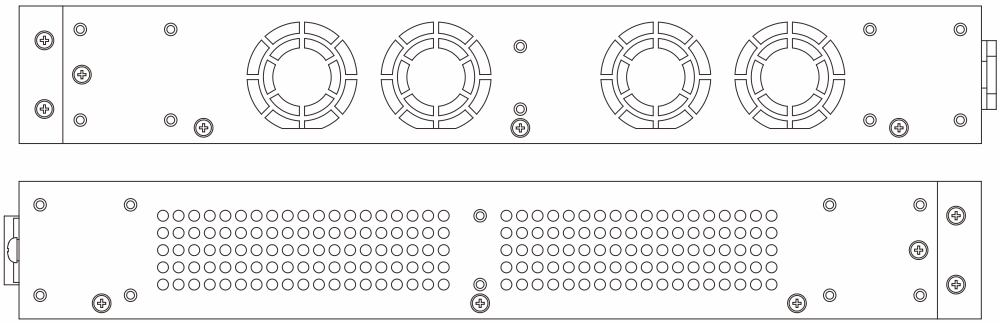

Figure 2-15 DGS-1520-28MP Side Panels

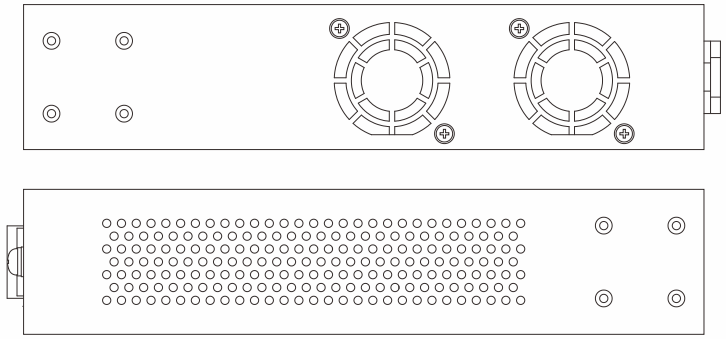

Figure 2-16 DGS-1520-52 Side Panels

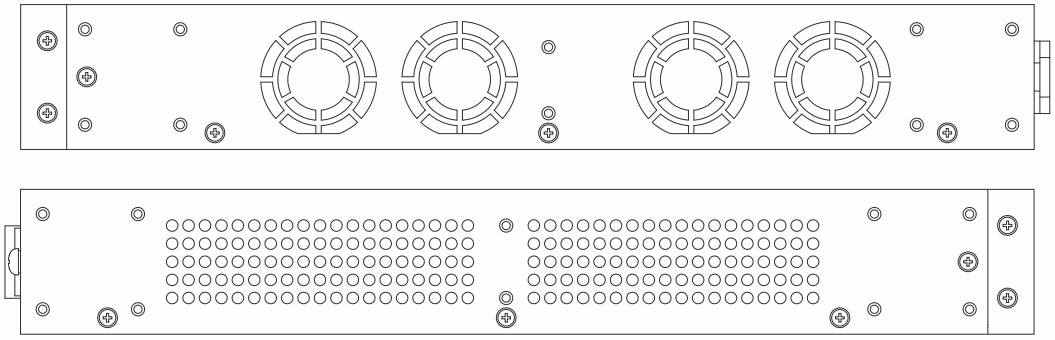

Figure 2-17 DGS-1520-52MP Side Panels

Smart Fans

The DGS-1520 Series Switches includes **smart fans** that will automatically change their speed depending on the internal temperature detected by the sensors built-in the Switch's hardware.

The following table lists at what temperature the speed of the fan(s) will change:

Module	Low Speed	Medium Speed	High Speed
DGS-1520-28	Below 30°C	Above 33°C / Below 37°C	Above 40°C
DGS-1520-28MP	Below 30°C	Above 33°C / Below 37°C	Above 40°C
DGS-1520-52	Below 30°C	Above 33°C / Below 37°C	Above 40°C
DGS-1520-52MP	Below 30°C	Above 33°C / Below 37°C	Above 40°C

3. Installation

Installation Guidelines
Installing the Switch without a Rack
Installing the Switch in a Standard 19" Rack
Installing Transceivers into the Transceiver Ports
Connecting AC Power to the Switch
Connecting PoH to the Switch
Installing the Redundant Power Supply (RPS)

Installation Guidelines

This section will discuss the hardware installation guidelines that the user must follow in order to properly and safely install this switch into the appropriate environment.

- Visually inspect the power cord and see that it is fully secured to both the power connector, on the Switch, and the electrical outlet that supplies power.
- Install the Switch in a fairly cool and dry place within the acceptable operating temperature and humidity ranges. For more information about the acceptable operating temperature and humidity ranges, refer to the Physical and Environmental section.
- Install the Switch in a site free from strong electromagnetic field generators such as motors, vibration, dust, and direct exposure to sunlight.

Installing the Switch without a Rack

This section is used to guide the user through installing the Switch in an area other than a switch rack. Attach the included rubber feet to the bottom of the Switch. Take note that there should be marked blocks on the bottom of the Switch to indicate where to attach the rubber feet. These markings are usually found in each corner on the bottom of the device. The rubber feet cushion the Switch, protecting the casing from scratches and preventing it from scratching other surfaces.

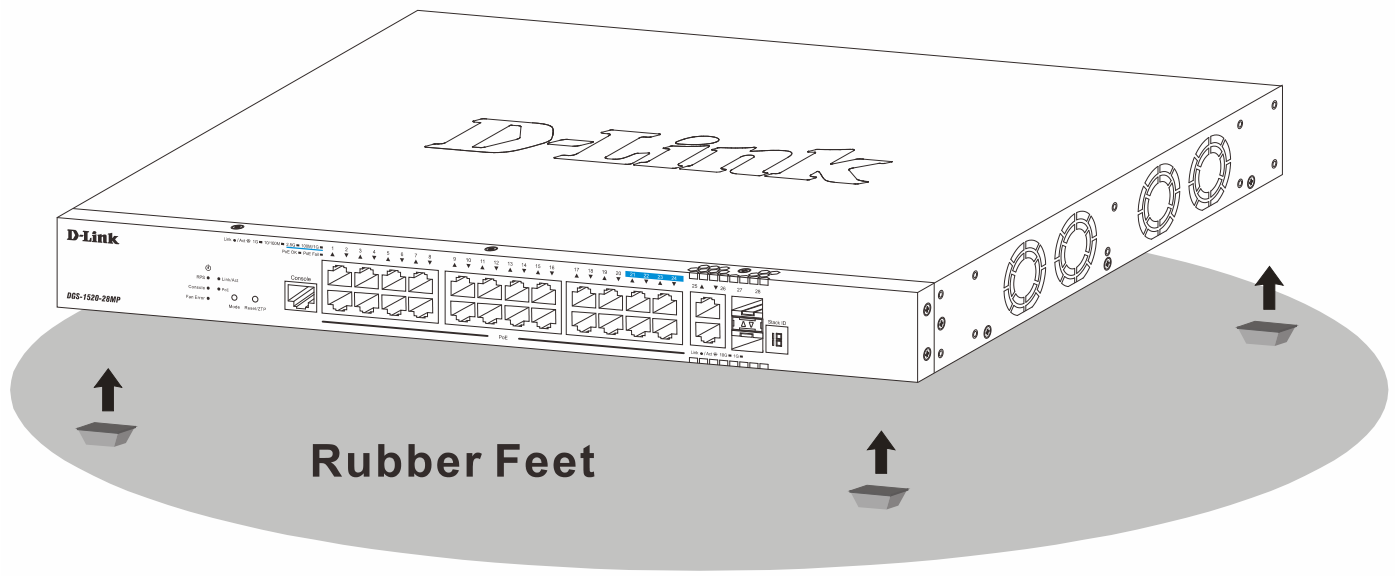

Figure 3-1 Attaching rubber feet to the Switch

Install the Switch on a sturdy, level surface that can support the weight of the Switch. Do not place any heavy objects on the Switch. The power outlet should be within 1.82 meters (6 feet) of the Switch. Make sure that there is proper heat dissipation from and adequate ventilation around the Switch. Leave at least 10 cm (4 inches) of space at the front, sides, and rear of the Switch for ventilation.

Installing the Switch in a Standard 19" Rack

This section is used to guide the user through installing the Switch into a switch rack. The Switch can be mounted in a standard 19"(1U) rack using the **rack mounting kit** included in the package contents.

Fasten the mounting brackets to the sides of the Switch using the screws provided.

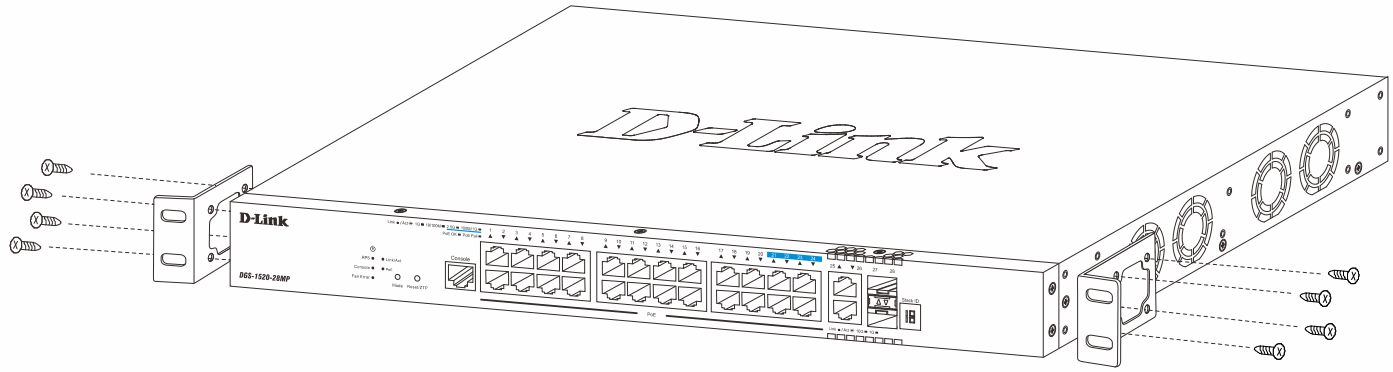

Figure 3-2 Attaching rack-mount brackets to the Switch

Fasten the mounting brackets in any available open space in the rack using the screws provided.

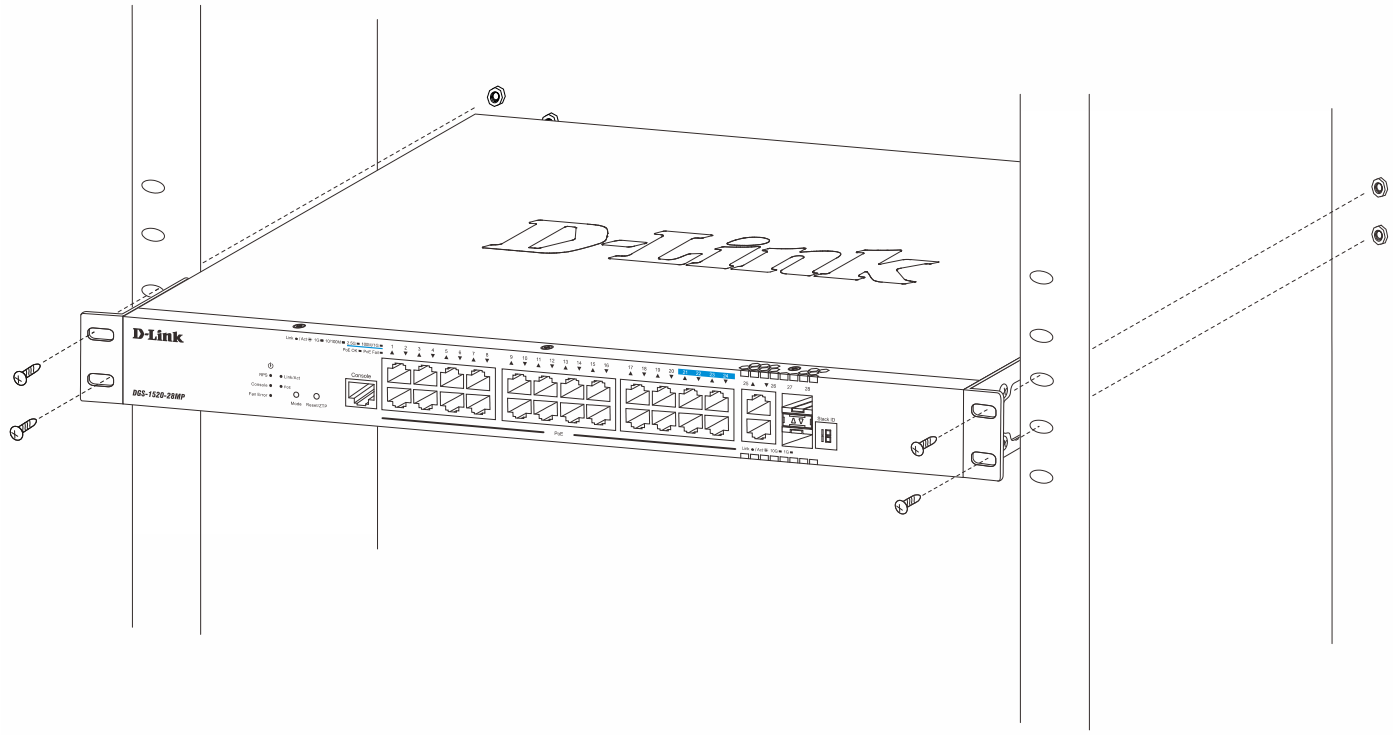

Figure 3-3 Installing the Switch in a Rack

Make sure that there is adequate space around the Switch to allow for proper airflow, ventilation, and cooling.

Installing Transceivers into the Transceiver Ports

The Switch is equipped with SFP+ ports that can be used to connect various networking devices to this switch that do not support the standard RJ45 wiring connection. These ports are generally used to connect this switch to optical fiber connections and can be used to connect devices to the Switch over great distances. The maximum distance that the RJ45 wiring connection can reach is 100 meters. Fiber optic connections can span several kilometers.

The figure below illustrates how to insert SFP/SFP+ transceivers into the SFP+ ports.

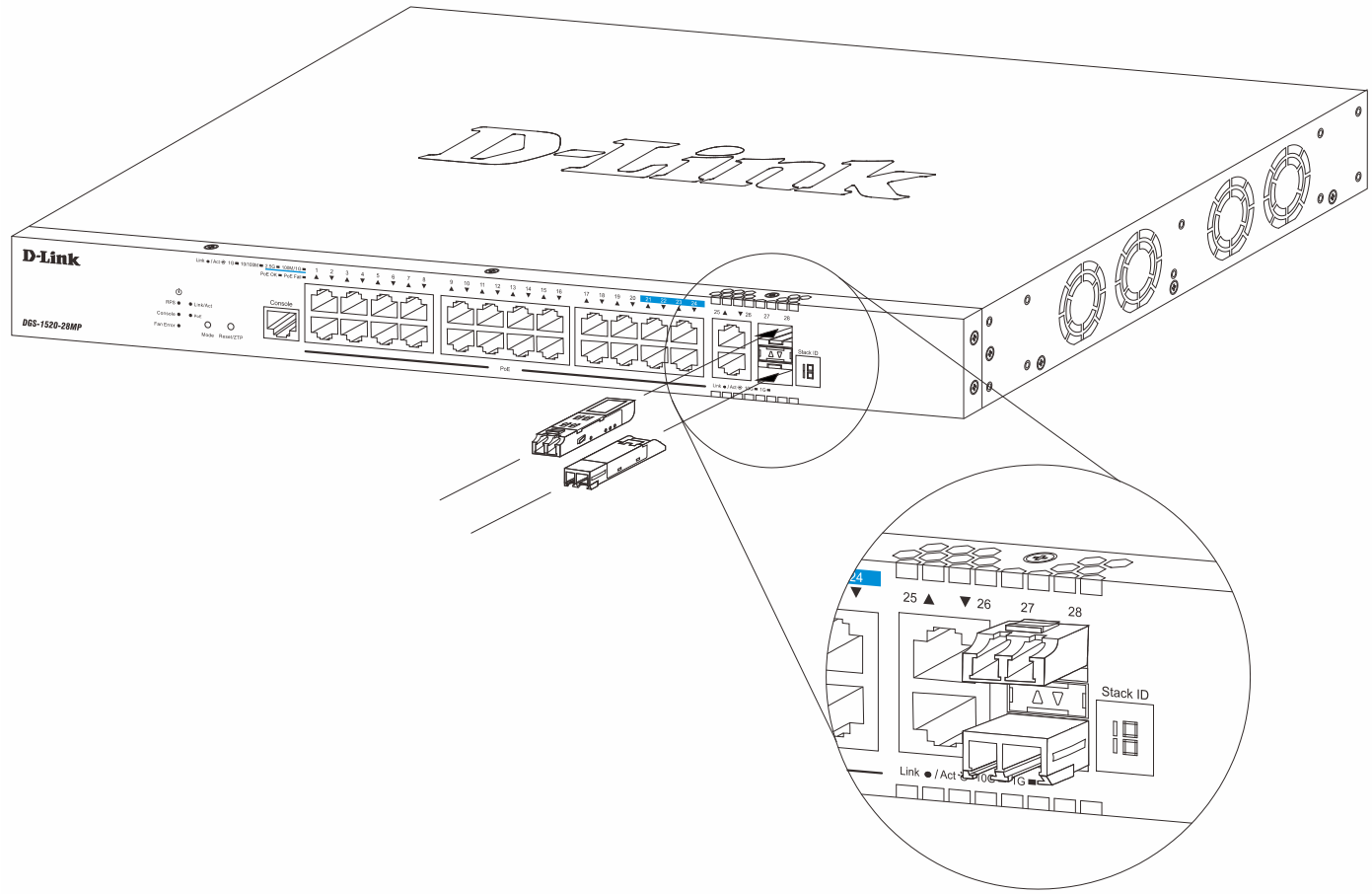

Figure 3-4 Inserting transceivers into the transceiver ports

NOTE: For the full list of D-Link SFP/SFP+ transceivers that are supported on the Switch, refer to the **Supported SFP/SFP+ Transceivers** table on page 33.

NOTE: Only use pluggable optical modules and Direct-Attach Cables (DAC) that meet the following regulatory requirements:

- Class 1 Laser Product
- UL and/or CSA registered component for North America
- FCC 21 CFR Chapter 1, Sub-chapter J in accordance with FDA & CDRH requirements
- IEC/EN 60825-1/-2: 2007 2nd edition or later, European Standard

Connecting AC Power to the Switch

To connect AC power to the Switch, plug one end of the AC power cord into the AC power socket of the Switch and the other end of the AC power cord into the local AC power source outlet. There is no power switch/button on the Switch. The system will power on automatically.

After the system is powered on, the **Power** LED will blink green to indicate that the system is booting up. In the event of a power failure, just as a precaution, unplug the power cord from the Switch. After the power returned, plug the power cord back into the power socket of the Switch.

Installing the AC Power Cord Retainer

To prevent accidental removal of the AC power cord, it is recommended to install the **AC Power Cord Retainer Set** together with the AC power cord. The AC Power Cord Retainer Set is included in the package contents.

With the rough side facing down, insert the tie wrap into the hole below the power socket.

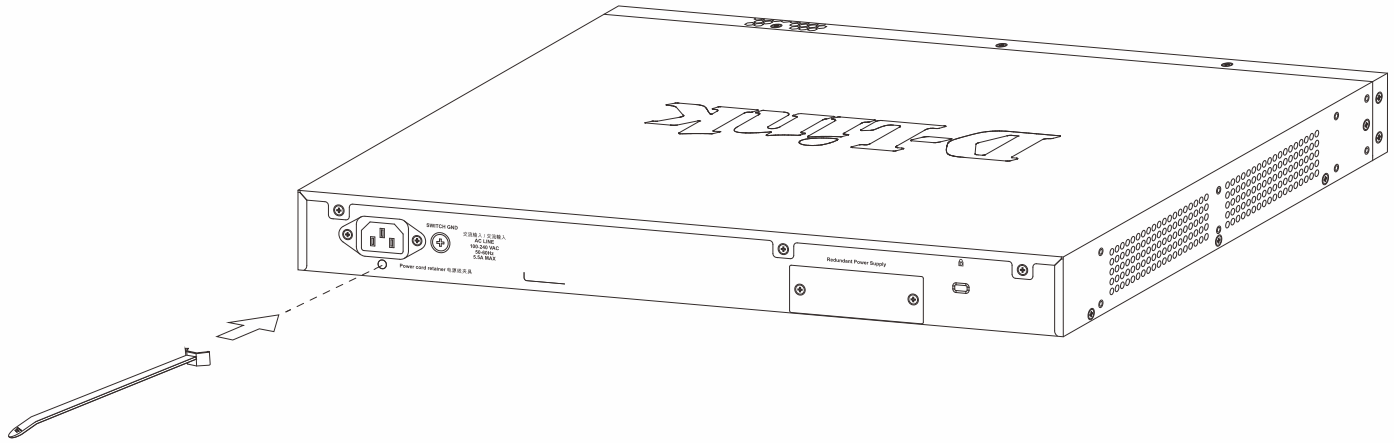

Figure 3-5 Insert Tie Wrap into the Switch

Plug the AC power cord into the power socket of the Switch.

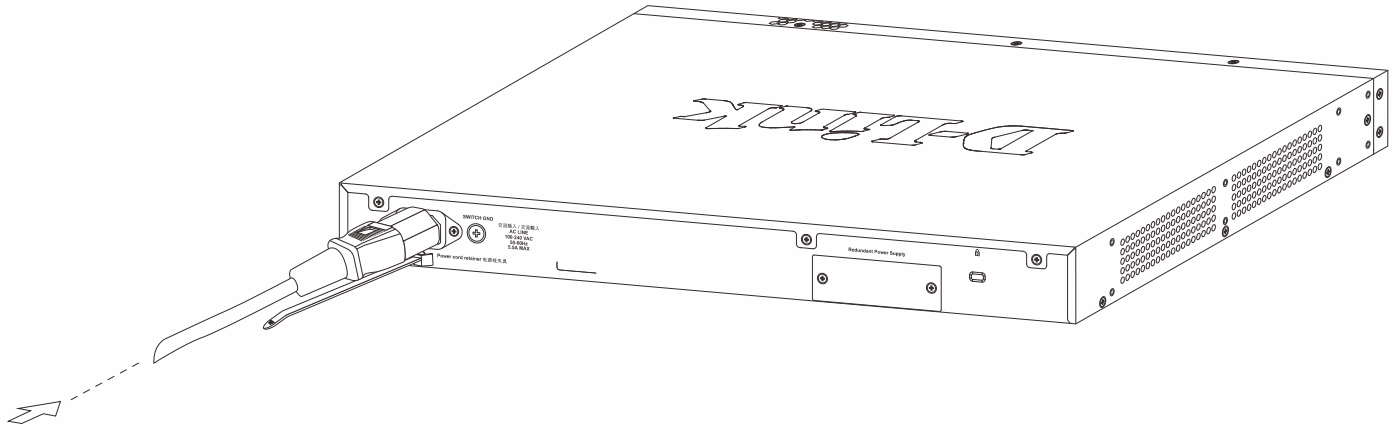

Figure 3-6 Connect the power cord to the Switch

Slide the retainer through the tie wrap until the end of the cord.

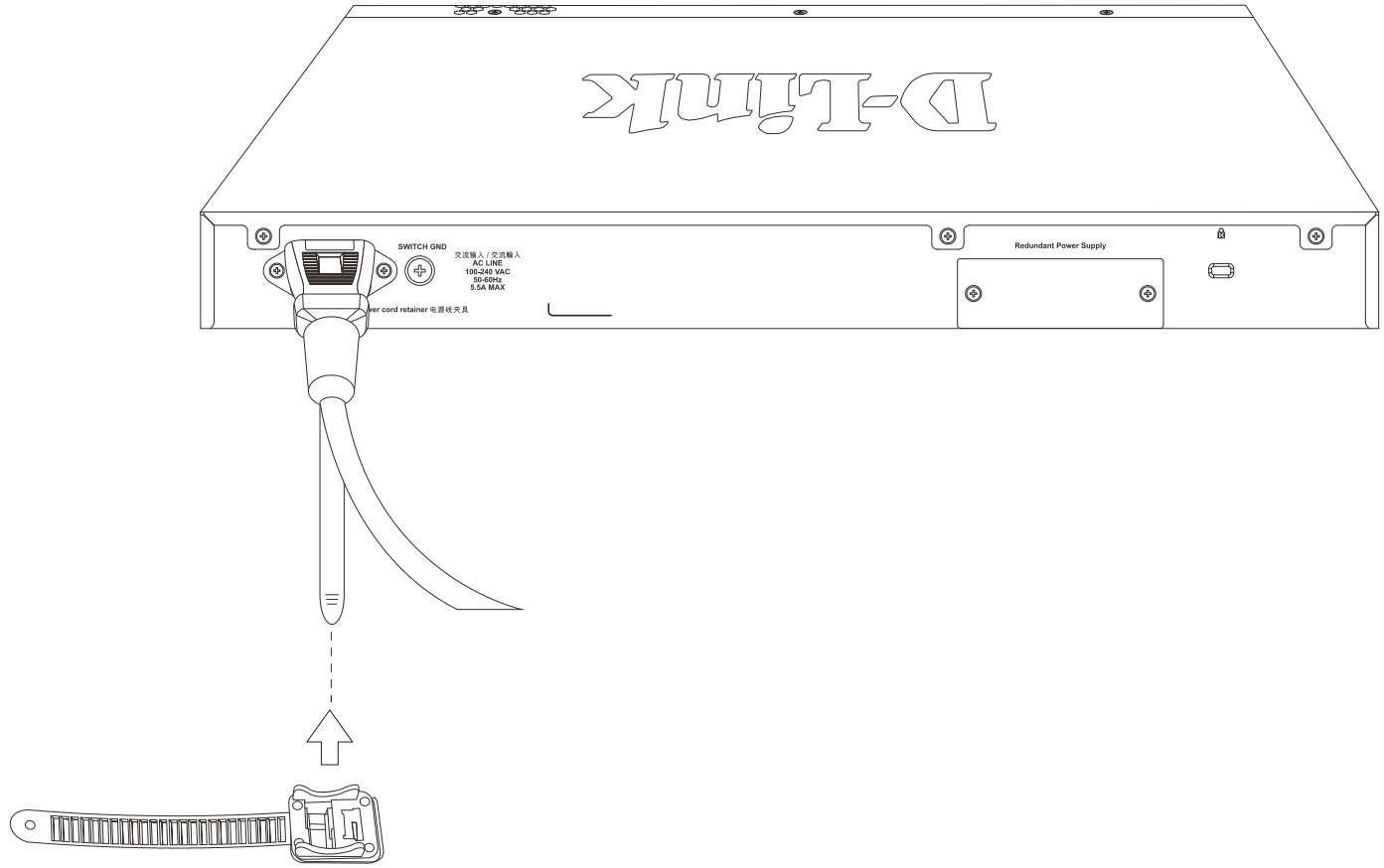

Figure 3-7 Slide the Retainer through the Tie Wrap

Circle the tie of the retainer around the power cord and into the locker of the retainer.

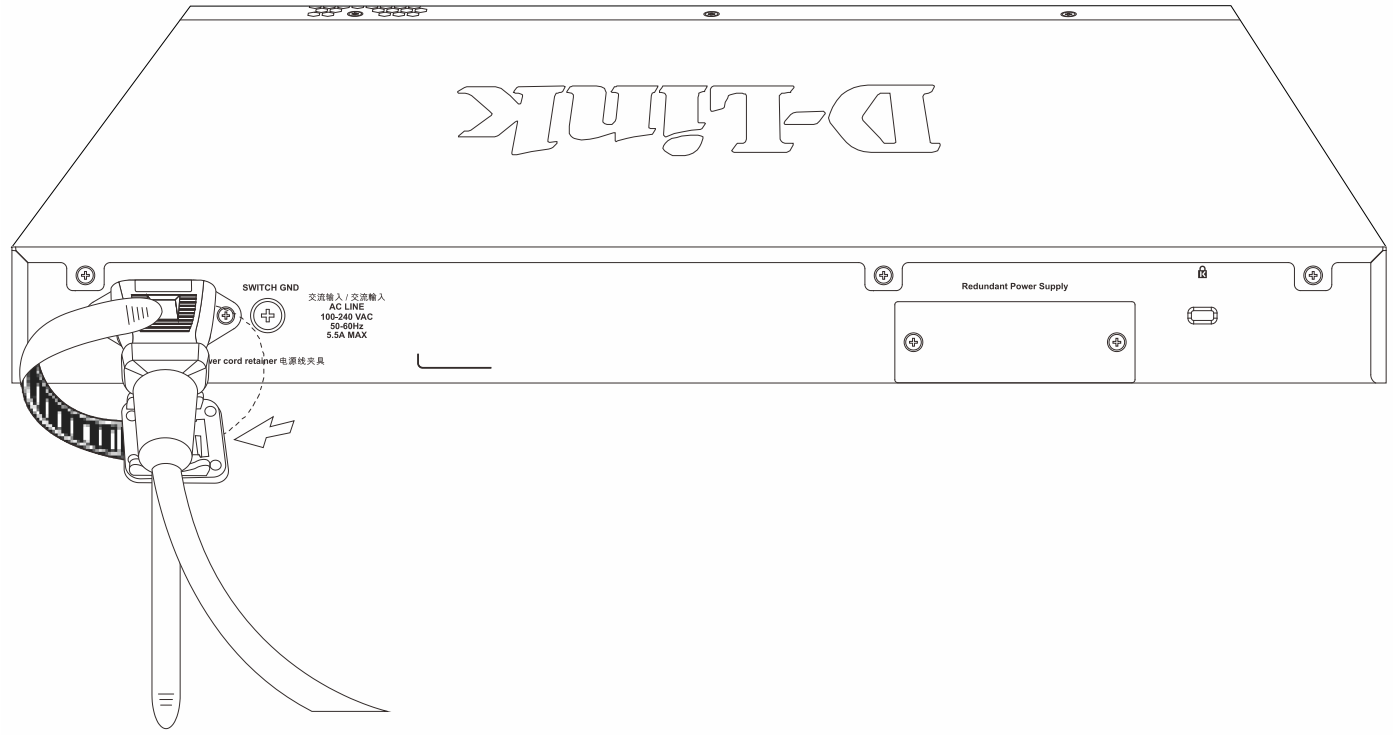

Figure 3-8 Circle around the power cord

Fasten the tie of the retainer until the power cord is secured.

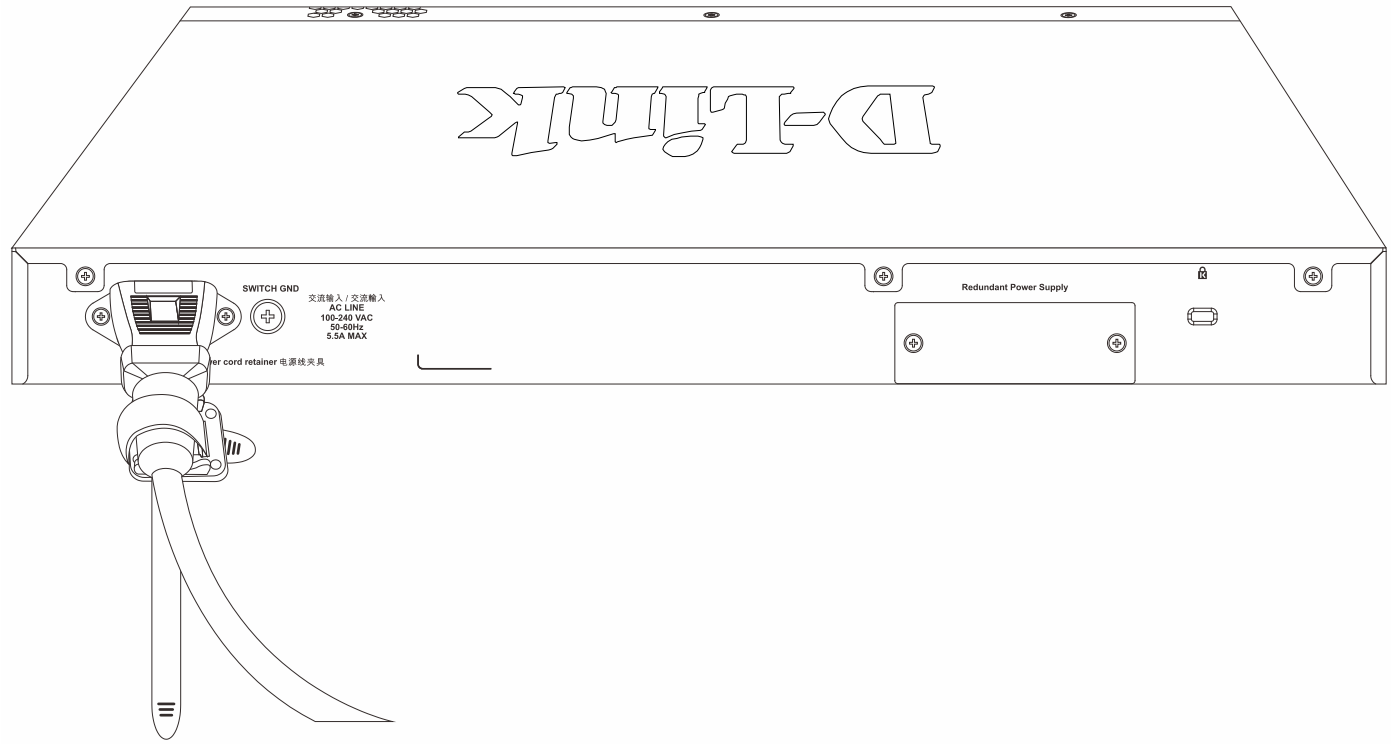

Figure 3-9 Secure the power cord

Connecting PoH to the Switch

When AC power is not available, the Switch can be powered using PoH (Power over HDBaseT) through the MGMT port. Adhering to HDBaseT, up to 90 Watts of DC power can be provided to the Switch from Power Sourcing Equipment (PSE) over a Category 5e/6a LAN cable.

When AC power is used, the PoH connection to the MGMT port can be used as a backup power supply to the Switch. When AC power fails, the PoH DC power through the MGMT port will keep the Switch powered on until AC power returns.

NOTE: Only the **DGS-1520-28** and **DGS-1520-52** feature a MGMT PoH-capable port on the back panel.

NOTE: The D-Link **DPS-520** Managed PSE is the recommended DC power sourcing equipment for the Switch.

CAUTION: Do not connect the RPS to AC power before the PoH cable is connected. This might damage the internal power supply.

ATTENTION: Ne branchez pas le RPS sur le courant alternatif avant que le câble PoH ne soit branché. Cela pourrait endommager l'alimentation électrique interne.

The following diagram illustrates how to connect the powered Ethernet cable from the PSE (at the bottom) to the MGMT port on the Switch (at the top).

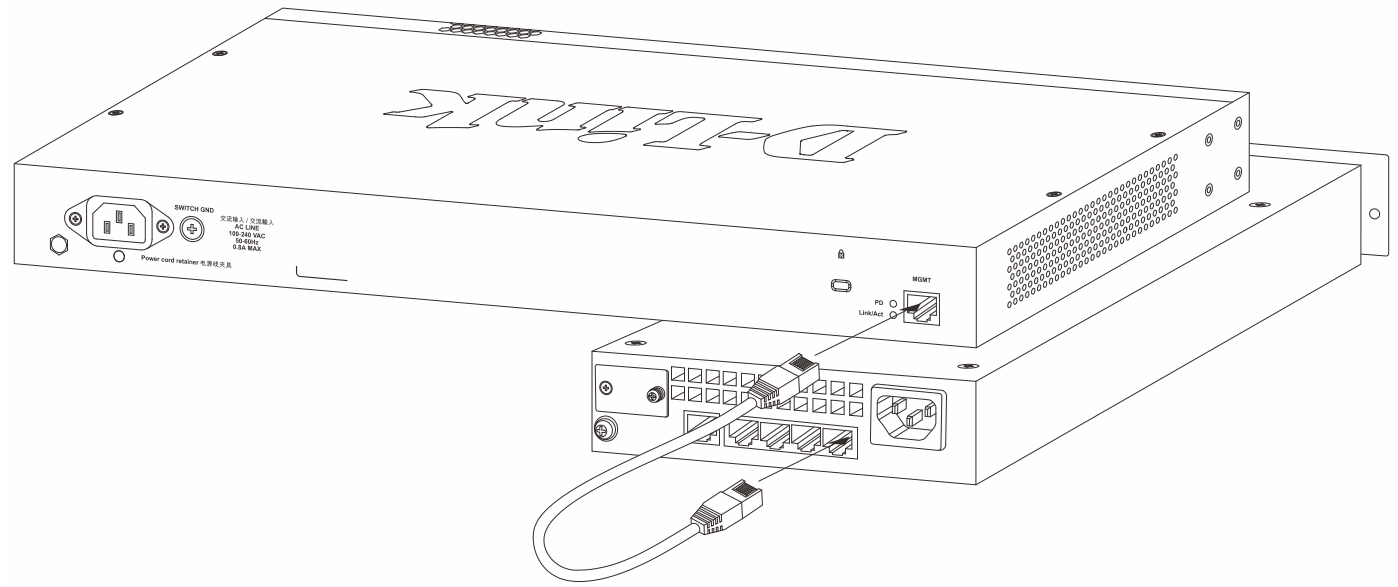

Figure 3-10 Connecting the PSE to the MGMT Port

CAUTION: Leave at least 15 cm (6 inches) of space at the rear of the Switch when an RPS is installed to prevent cable damage.

ATTENTION: Laissez un espace d'au moins 15 cm (6 pouces) à l'arrière du commutateur lorsqu'un RPS est installé pour éviter d'endommager les câbles.

Installing the Redundant Power Supply (RPS)

An RPS is an external unit, enclosed in solid metal casing, with sockets to connect AC or DC-powered sources at one end and to connect to a switch's internal power supply on the other end. The RPS provides a low-cost, simple solution to the problem of an inadvertent failure of the internal power supply of an Ethernet switch, which can result in the shutdown of that switch, the devices attached to its ports, or an entire network.

Connecting the DPS-700 RPS to the Switch

The D-Link DPS-700 is the recommended RPS for the Switch. This RPS is designed to conform to the wattage requirements of D-Link's Ethernet and Gigabit switches and can be connected to the RPS port of the Switch using a 22-pin DC power cable. A standard, three-pronged AC power cable connects the RPS to the main power source.

CAUTION: Do not connect the RPS to AC power before the DC power cable is connected. This might damage the internal power supply.

ATTENTION: Ne branchez pas le RPS sur le courant alternatif avant que le câble d'alimentation en courant continu ne soit branché. Cela pourrait endommager l'alimentation électrique interne.

To connect the RPS to the Switch, remove the AC power cord from the AC power port of the Switch.

With a Phillips-head screwdriver, remove the RPS port cover by unscrewing the two screws that hold the RPS cover in place.

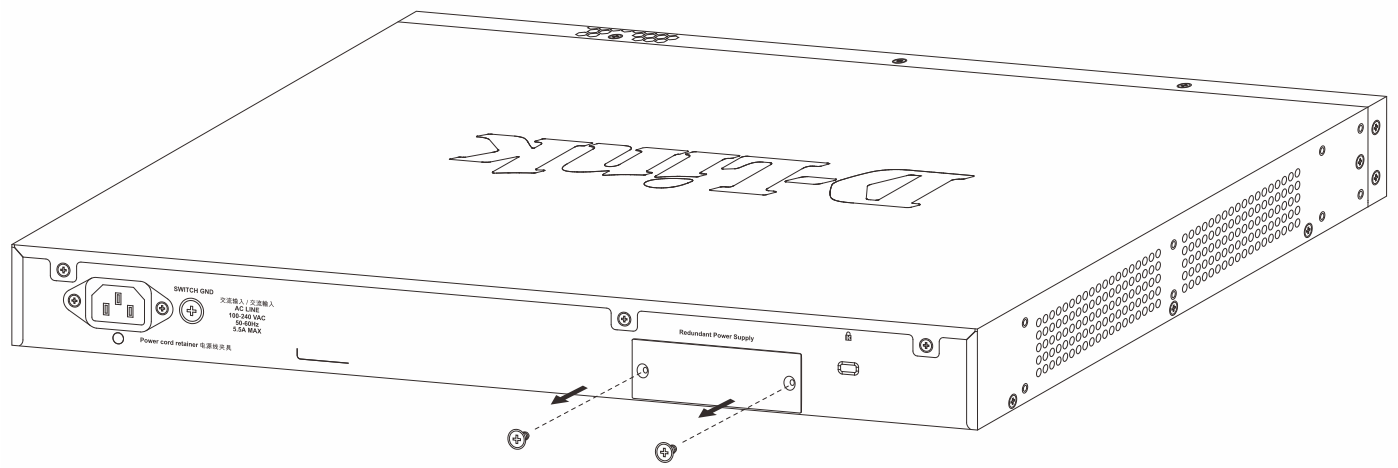

Figure 3-11 Removing the RPS port cover

Insert one end of the 22-pin DC power cable into the RPS port on the switch and the other end into the RPS. Connect the RPS to the main AC power source.

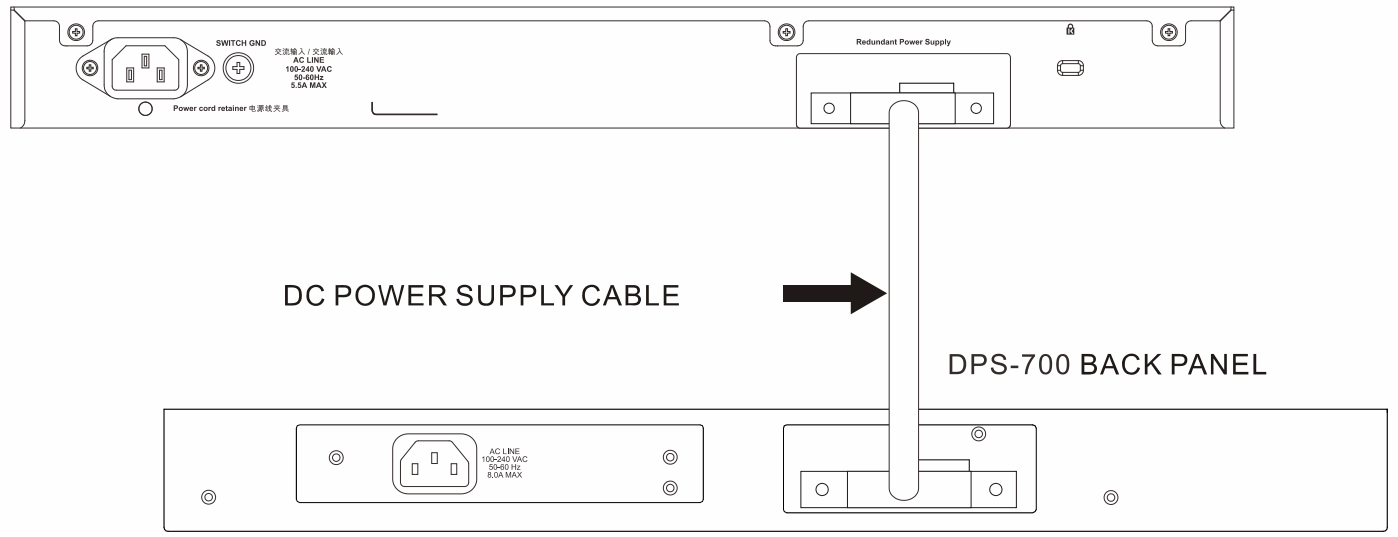

Figure 3-12 Connecting the DPS-700

A green LED on the front panel of the RPS will be on to indicate a successful connection. Reconnect the AC power cord to the AC power port of the Switch. The RPS LED indicator on the front panel of the Switch will indicate that an RPS is present and now in operation. No software configuration is required.

CAUTION: Leave at least 15 cm (6 inches) of space at the rear of the Switch when an RPS is installed to prevent cable damage.

ATTENTION: Laissez un espace d'au moins 15 cm (6 pouces) à l'arrière du commutateur lorsqu'un RPS est installé pour éviter d'endommager les câbles.

NOTE: Only the **DGS-1520-28MP** and **DGS-1520-52MP** feature a 22-pin RPS port on the back panel.

Always keep the RPS port cover installed when there is no RPS connected to the Switch.

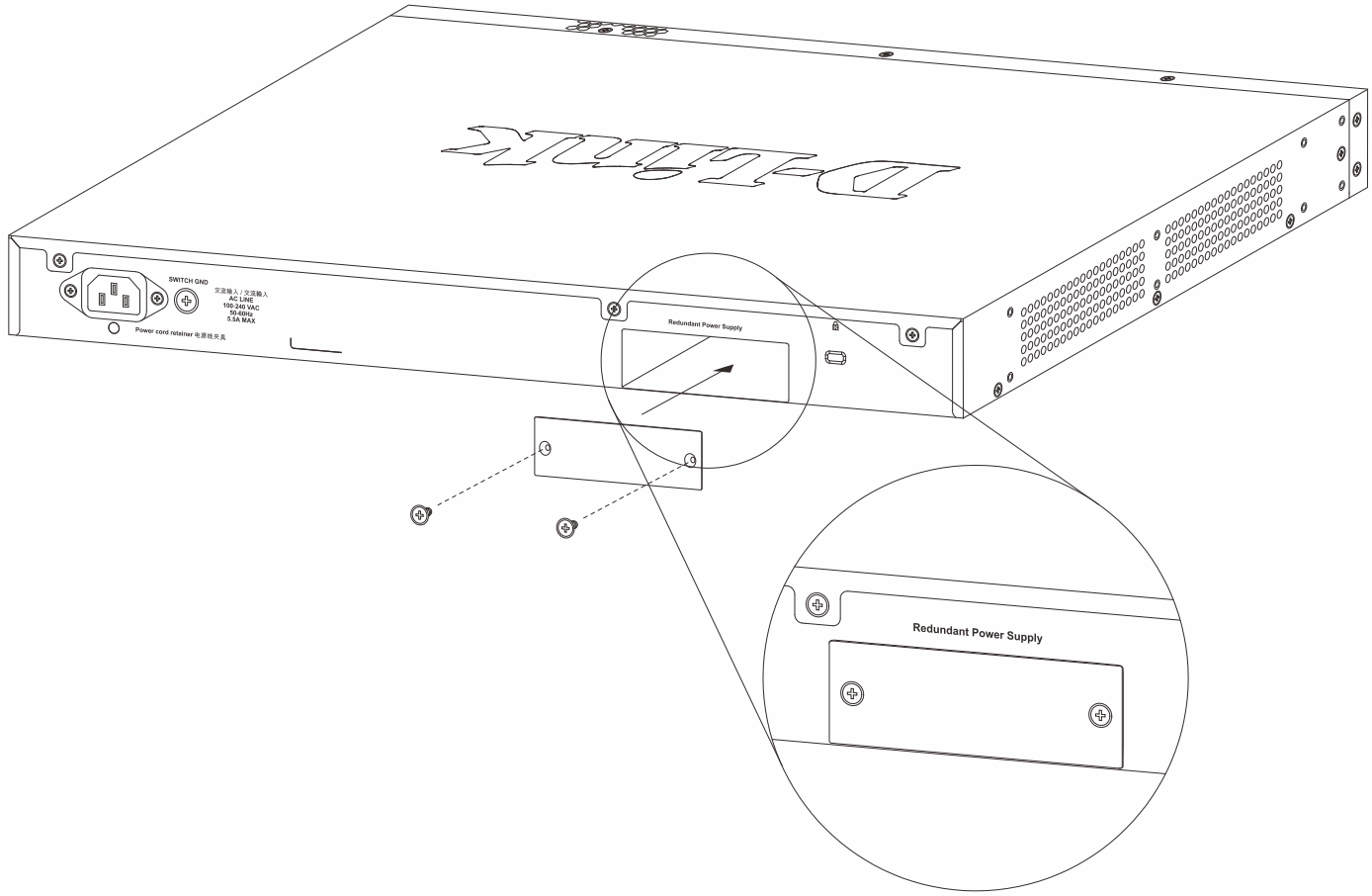

Figure 3-13 Reinstalling the RPS port cover (when no RPS is connected)

4. Switch Connections

Stacking the Switch
Switch to Switch
Switch to Server
Switch to End Node

Stacking the Switch

Switches in this series support stacking up to 8 switches together while being managed through one console connection or MGMT connection on the master switch or through any of the RJ45/SFP+ ports using Telnet, the Web UI, and SNMP. This cost-effective switch provides an affordable solution for administrators to upgrade their networks using the stacking ports to scale and stack the Switches. This increases overall reliability, serviceability, and availability.

Switches in the series can be physically stacked with optical fiber cables or Direct Attached Cables (DACs) with SFP+ connectors. Only the last four SFP+ ports on the Switch can be used for physical stacking.

The following stacking topologies are supported on the Switch:

- **Duplex Chain** - This topology stacks switches together in a chain-link format. Using this method, data transfer is only possible in one direction. If there is a break in the chain, data transfer will be affected.
- **Duplex Ring** - This topology stacks switches in a ring or circle format where data can be transferred in two directions. It is very resilient because if there is a break in the ring, data can still be transferred through the stacking cables between switches in the stack using the alternate path.

In the following diagram, switches are stacked in the **Duplex Chain** topology using the two 10GBASE-T ports.

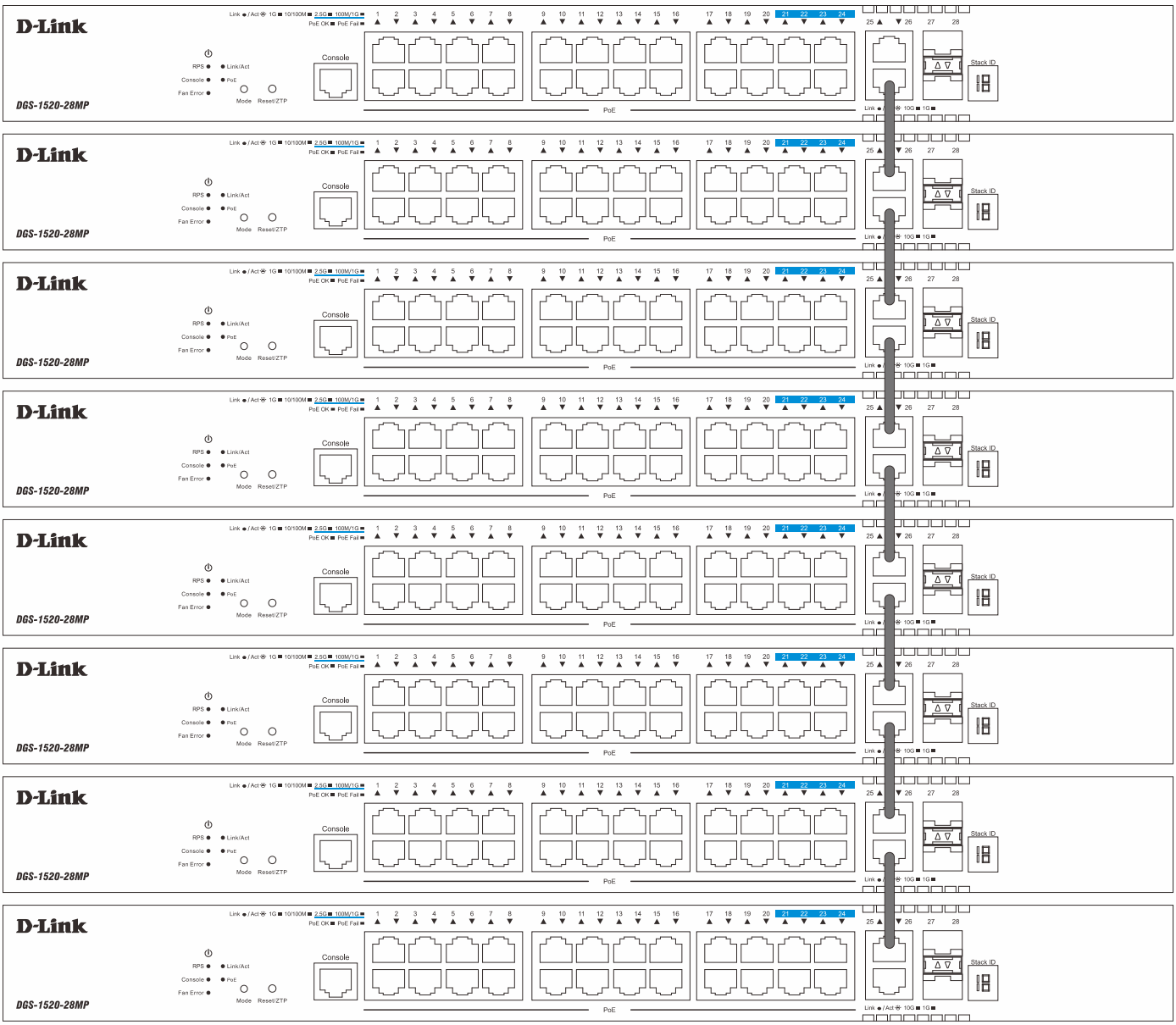

Figure 4-1 Duplex Chain Stacking Topology

In the following diagram, switches are stacked in the **Duplex Ring** topology using the two 10GBASE-T ports.

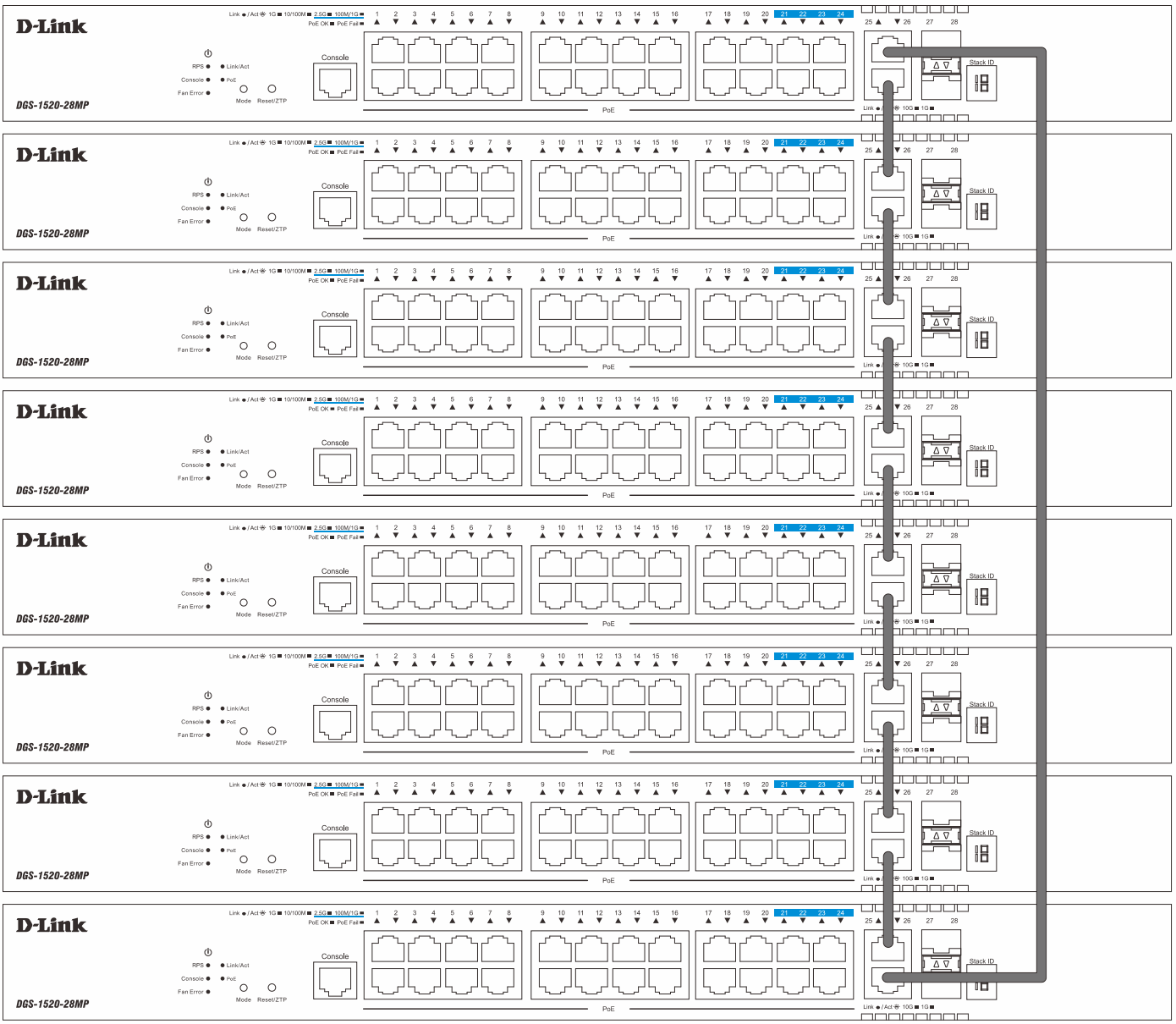

Figure 4-2 Duplex Ring Stacking Topology

Physical stacking needs to be enabled and can be configured to support a **2-port** or **4-port** stacking configuration. SIO1 (Stacking Input/Output 1) and SIO2 are logical stacking port pairs. A logical stacking port pair must always be connected to the same Switch in the stack. Splitting logical stacking port pairs between different Switches in the stack might not guarantee a stable stacking connection.

The following table lists the stacking configuration with the corresponding SIO port pairs:

Configuration	Switch	Logical SIO1	Logical SIO2	Bandwidth
2-port 10GBASE-T	**DGS-1520-28**	Port 25	Port 26	40 Gbps (full-duplex)
	DGS-1520-28MP	Port 25	Port 26	40 Gbps (full-duplex)
	DGS-1520-52	Port 49	Port 50	40 Gbps (full-duplex)
	DGS-1520-52MP	Port 49	Port 50	40 Gbps (full-duplex)
2-port SFP+	**DGS-1520-28**	Port 27	Port 28	40 Gbps (full-duplex)
	DGS-1520-28MP	Port 27	Port 28	40 Gbps (full-duplex)
	DGS-1520-52	Port 51	Port 52	40 Gbps (full-duplex)

Configuration	Switch	Logical SIO1	Logical SIO2	Bandwidth
	DGS-1520-52MP	Port 51	Port 52	40 Gbps (full-duplex)
4-port	**DGS-1520-28**	Port 25 and 26	Port 27 and 28	80 Gbps (full-duplex)
	DGS-1520-28MP	Port 25 and 26	Port 27 and 28	80 Gbps (full-duplex)
	DGS-1520-52	Port 49 and 50	Port 51 and 52	80 Gbps (full-duplex)
	DGS-1520-52MP	Port 49 and 50	Port 51 and 52	80 Gbps (full-duplex)

NOTE: SIO1 (Stacking Input/Output 1) and SIO2 are logical stacking port pairs. A logical stacking port pair must always be connected to the same Switch in the stack. Splitting logical stacking port pairs between different Switches in the stack might not guarantee a stable stacking connection.

Switch to Switch

The Switch can be used to connect to any other switch or hub in the network. This network topology is used when the Switch does not have enough ports to cater for all the end nodes in the network.

There is a great deal of flexibility on how connections are made using the appropriate cabling.

- Connect a 10BASE-T or 100BASE-TX switch port to the Switch using a Category 3/4/5 UTP/STP cable.
- Connect a 1000BASE-T switch port to the Switch via a Category 5e UTP/STP cable.
- Connect a 2.5GBASE-T switch port to the Switch via a Category 5e/6 UTP/STP cable.
- Connect a 10GBASE-T switch port to the Switch via a Category 6a UTP/STP cable.
- Connect a fiber uplink switch port to the Switch's SFP+ port via a fiber optical cable.

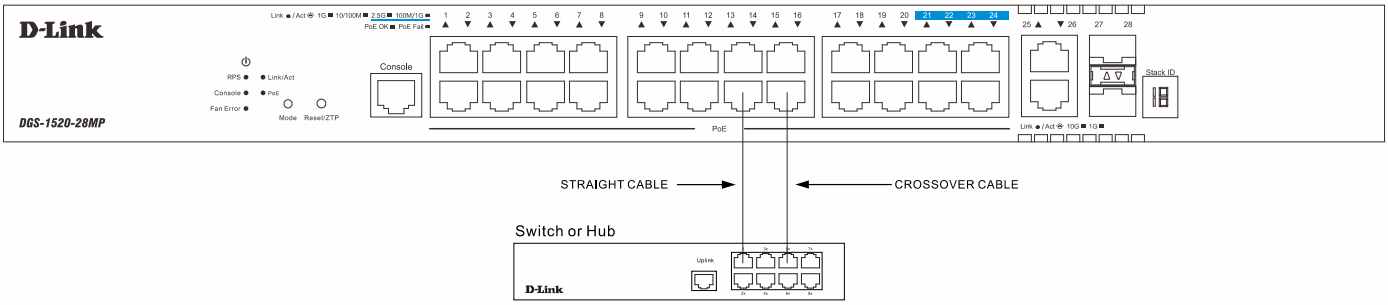

Figure 4-3 Switch to another Switch/Hub

Switch to Server

The Switch is ideal for connecting to a network backbone, server, or server farm. The RJ45 ports operate at speeds of 10/100 Mbps and 1/2.5/10 Gbps. The SFP+ ports operate at speeds of 1/10 Gbps.

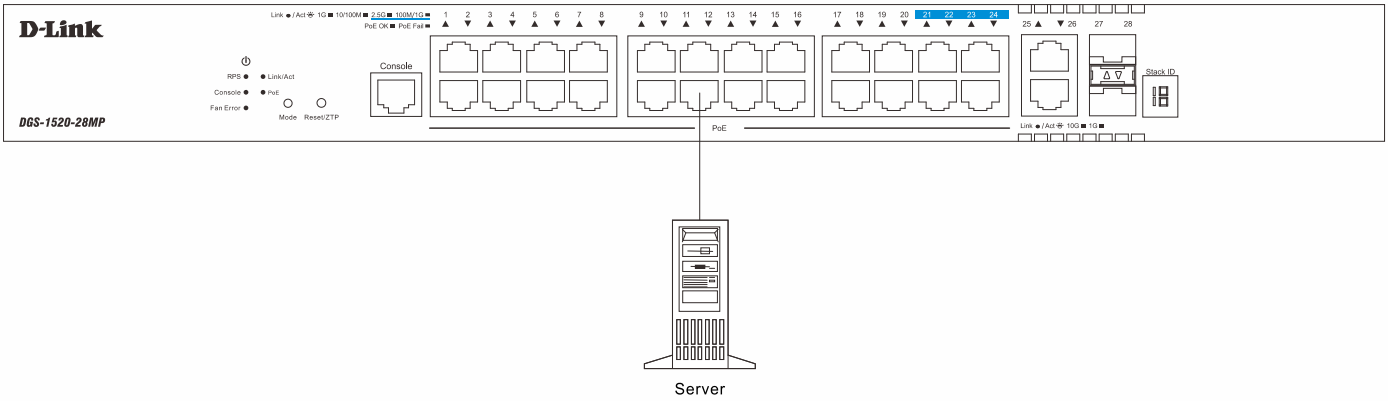

Figure 4-4 Switch to a Server

Switch to End Node

An end node is a generic name for edge networking devices that will be connected to this switch. Typical examples of end nodes are Personal Computers (PCs), Notebooks, Access Points, Print Servers, VoIP Phones and more. Each end node should be fitted with an RJ45 networking port. Normally, end nodes will connect to this switch by using a standard twisted-pair UTP/STP network cable. When a successful connection is established, the corresponding port light will illuminate and blink to indicate that network activity is taking place on that port.

The diagram below displays a typical end node connected to the Switch.

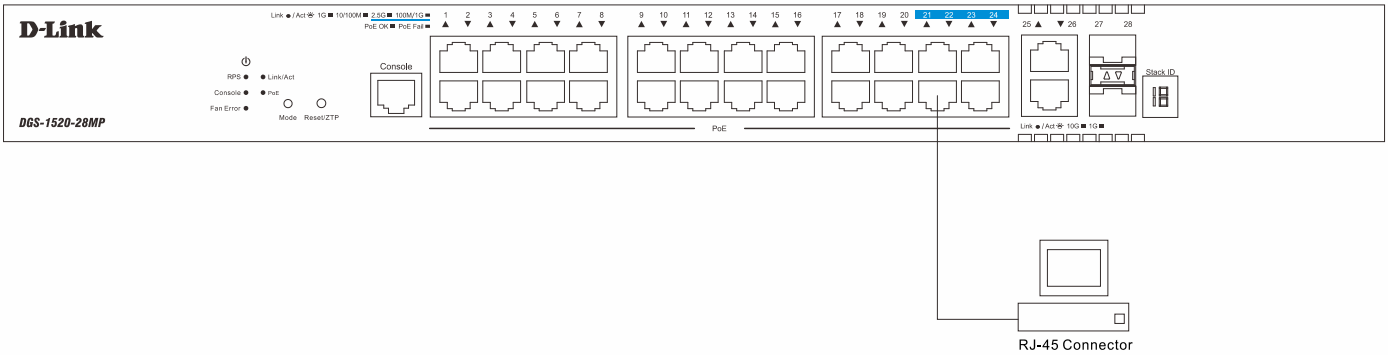

Figure 4-5 Switch to End Node

5. Switch Management

Management Options
Command Line Interface (CLI)
Web User Interface (Web UI)
SNMP-based Management

Management Options

To configure, manage, and monitor the software features on the Switch, users can connect to the Command Line Interface (CLI), Web User Interface (Web UI), or through the means of third-party SNMP software.

Command Line Interface (CLI)

The CLI provides access to all of the software features available on the Switch. These features can be enabled, configured, disabled, or monitored by simply entering the appropriate command after the CLI prompt and pressing the Enter key. The Console port offers an Out-Of-Band (OOB) connection to the CLI and the LAN ports offers an in-band connection to the CLI using Telnet or SSH.

NOTE: For more information about the CLI, refer to the *DGS-1520 Series CLI Reference Guide*.

Connecting to the Console Port

The Console port is used to connect to the CLI of the Switch. Connect the DB9 connector of the console cable (included in the packaging) to the Serial (COM) port of the computer. Connect the RJ45 connector of the console cable to the Console port on the Switch.

To access the CLI through the Console port, *Terminal Emulation Software* must be used like *PuTTY* or *Tera Term*. The Switch uses a connection of **115200** bits per second with **no flow control** enabled.

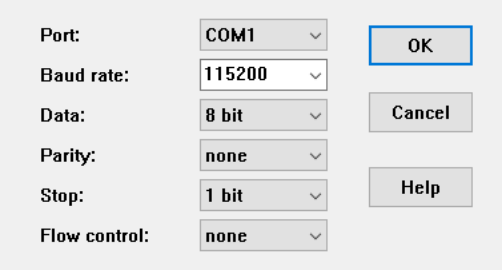

Figure 5-1 Console Connection Settings

After the boot sequence completed, the CLI login screen is displayed.

NOTE: The default username and password for the CLI and Web UI is *admin*.

Logging into the CLI

At the login screen, enter the **Username** and **Password** and press **Enter** after each entry to access the CLI.

```
                    DGS-1520-28MP Gigabit Ethernet Smart Managed Switch

                                  Command Line Interface
                                 Firmware: Build 1.00.018
                 Copyright(C) 2020 D-Link Corporation. All rights reserved.

User Access Verification

Username:admin
Password:*****

Switch#
```

NOTE: For security reasons, it is highly recommended to configure a personal username and password for this Switch.

Creating a User Account

To create a new user account, use the **username** command in the Global Configuration Mode.

```
Switch# configure terminal
Switch(config)# username NewUser password 12345
Switch(config)# username NewUser privilege 15
Switch(config)#
```

A user account with the username 'NewUser', password '12345', and privilege level 15 was created.

NOTE: Usernames can be up to 32 characters in length. Passwords can be up to 32 plain-text characters in length. Passwords are case sensitive.

Configuring the IP Address

To configure the IP address of the Switch, use the **ip address** command in the VLAN Interface Configuration Mode.

```
Switch# configure terminal
Switch(config)# interface vlan 1
Switch(config-if)# ip address 10.50.50.50 255.0.0.0
Switch(config-if)#
```

The IP address of the Switch was change to '10.50.50.50' with the subnet mask of '255.0.0.0'.

Web User Interface (Web UI)

The Web UI, a graphical representation, provides access to most of the software features available on the Switch. These features can be enabled, configured, disabled, or monitored using any standard web browser, like Microsoft's Internet Explorer, Mozilla Firefox, Google Chrome, or Safari. The MGMT port offers an Out-Of-Band (OOB) connection to the Web UI and the LAN ports offers an in-band connection to the Web UI using HTTP or HTTPS (SSL).

NOTE: For more information about the Web UI, refer to the *DGS-1520 Series Web UI Reference Guide*.

Connecting to the Web UI

To access the Web UI, open a standard web browser, enter the IP address of the Switch into the address bar of the browser, and press the **Enter** key.

Figure 5-2 IP address in Internet Explorer

NOTE: The default IP address of the switch is ***10.90.90.90*** (subnet mask *255.0.0.0*).
The default username and password is ***admin***.

Logging into the Web UI

In the authentication window, enter the **User Name** and **Password** and click the **Login** button to access the Web UI.

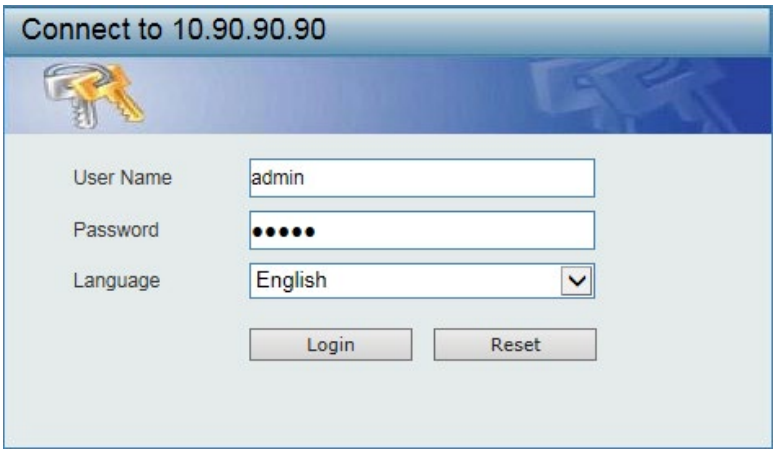

Figure 5-3 Web UI Login Window

NOTE: For security reasons, it is highly recommended to configure a personal username and password for this Switch.

Web Interface Navigation

After accessing the Web UI, the following will be displayed:

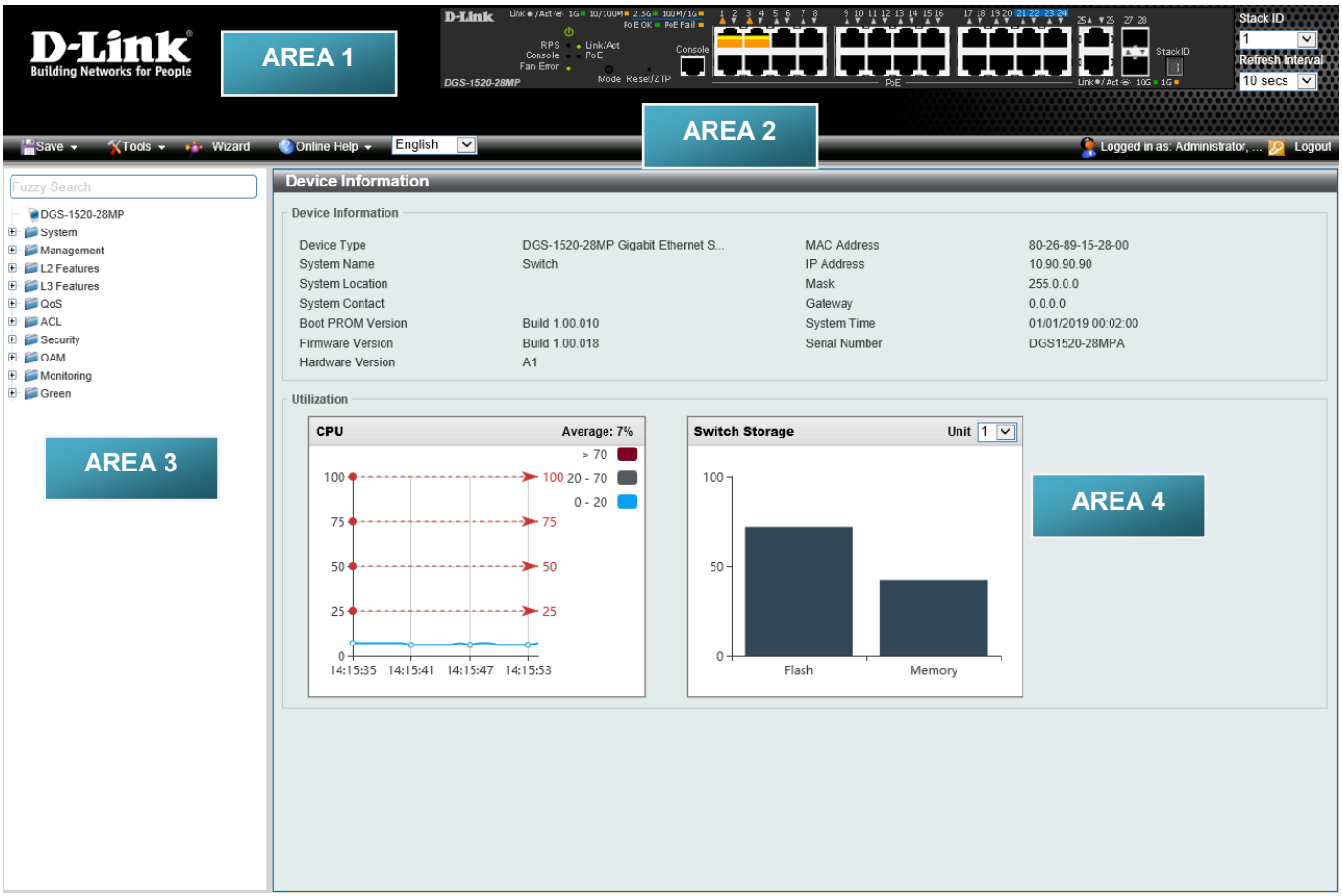

Figure 5-4 Web User Interface Areas

The Web UI is divided into four distinct areas that are described in the table below:

Area Number	Function
AREA 1	In this area, a graphical near real-time image of the front panel of the Switch is displayed with ports and expansion modules. Some management functions like port monitoring are also accessible here. Click the D-Link logo to go to the D-Link website.
AREA 2	In this area, a toolbar with access to functions like **Save**, **Tools**, **Online Help**, customized **Language** preferences, and a **Logout** option is available. The user account and IP address, currently accessing the Web UI, is displayed on the right in this toolbar.
AREA 3	In this area, the software features available in the Web UI are grouped into folders containing hyperlinks that will open window frames in Area 4. There is also a search option in this area that can be used to search for specific feature keywords in the Web UI to easily find the link to the set of features.
AREA 4	In this area, configuration and monitoring window frames are available based on the selections made in Area 3.

SNMP-based Management

The Switch can be managed with an SNMP-compatible console program. The Switch supports Simple Network Management Protocol (SNMP) versions 1, 2c, and 3. An SNMP agent decodes the incoming SNMP messages and responds to requests with MIB objects stored in the database. The SNMP agent updates the MIB objects to generate statistics and counters.

Connecting using SNMP

In SNMP versions 1 and 2c, user authentication is accomplished using *community strings*, which function like passwords. The remote user SNMP application and the Switch must use the same community string. SNMP packets from any station that were not authenticated are ignored (dropped).

The default community strings for the Switch are:

- **public** - Allows authorized management stations to retrieve MIB objects.
- **private** - Allows authorized management stations to retrieve and modify MIB objects.

SNMPv3 uses a more sophisticated authentication process that is separated into two parts. The first part is to maintain a list of users and their attributes that are allowed to act as SNMP managers. The second part describes what each user on that list can do as an SNMP manager.

The Switch allows groups of users to be listed and configured with a shared set of privileges. This SNMP version may also be set for a listed group of SNMP managers. Thus, a group of SNMP managers can be created to view read-only information or receive traps using SNMP version 1, while assigning a higher level of security to another group, granting read/write privileges using SNMP version 3.

Using SNMP version 3 individual users or groups of SNMP managers can be allowed to perform or be restricted from performing specific SNMP management functions. The functions that have been allowed or restricted are defined using the Object Identifier (OID) associated with a specific MIB. An additional layer of security is available for SNMP version 3 in that SNMP messages may be encrypted.

Traps

Traps are messages that are sent by an SNMP-enabled device to the Network Management Station (NMS) and can be used to alert network personnel of events that occur on the Switch. These events can be as serious, like a reboot (someone accidentally turned off the Switch), or less serious like a port status change. The Switch generates traps and sends them to a pre-configured IP address, usually an NMS. Typical traps include trap messages for Authentication Failure and Topology Change.

Management Information Base (MIB)

A MIB stores management and counter information. The Switch uses the standard MIB-II Management Information Base module. Consequently, values for MIB objects can be retrieved from any SNMP-based network management software. In addition to the standard MIB-II, the Switch also supports its own proprietary enterprise MIB as an extended Management Information Base. The proprietary MIB may also be retrieved by specifying the MIB Object Identifier. MIB values can be either read-only or read-write.

Appendix A - Technical Specifications

Physical Specifications				
Feature	**Description**			
Dimensions	***DGS-1520-28***	441 mm (W) x 207.4 mm (D) x 44 mm (H)		
	DGS-1520-28MP	441 mm (W) x 308.5 mm (D) x 44 mm (H)		
	DGS-1520-52	441 mm (W) x 207.4 mm (D) x 44 mm (H)		
	DGS-1520-52MP	441 mm (W) x 308.5 mm (D) x 44 mm (H)		
	All switch are 19-inch, 1 U Rack-mount size			
Weight	***DGS-1520-28***	2.33 kg		
	DGS-1520-28MP	4.29 kg		
	DGS-1520-52	2.78 kg		
	DGS-1520-52MP	4.80 kg		
AC Power Supply *(Internal)*	***DGS-1520-28***	100~240 VAC, 50~60 Hz, 0.8 A Max		
	DGS-1520-28MP	100~240 VAC, 50~60 Hz, 5.5 A Max		
	DGS-1520-52	100~240 VAC, 50~60 Hz, 1.0 A Max		
	DGS-1520-52MP	100~240 VAC, 50~60 Hz, 6.0 A Max		
Redundant Power Supply	***DGS-1520-28***	Optional RPS through the MGMT port (HDBaseT) on the back panel. Supports the DPS-520.		
	DGS-1520-52			
	DGS-1520-28MP	Optional RPS through the RPS port (22-pin) on the back panel. Supports the DPS-700.		
	DGS-1520-52MP			
Fans	The IC Sensor detects the temperature on the switch automatically and adjusts the speed.			
	DGS-1520-28	1 fan		
	DGS-1520-28MP	4 fans		
	DGS-1520-52	2 fans		
	DGS-1520-52MP	4 fans		
Power Consumption *(Maximum)*	***DGS-1520-28***	*100 VAC*	-	30.4 Watts
		240 VAC	-	30.2 Watts
	DGS-1520-28MP	*100 VAC*	*PoE On*	810.2 Watts with RPS
				452.3 Watts without RPS
			PoE Off	44.2 Watts
		240 VAC	*PoE On*	812.7 Watts with RPS
				453.3 Watts without RPS
			PoE Off	45.2 Watts
	DGS-1520-52	*100 VAC*	-	50.7 Watts
		240 VAC	-	51.2 Watts
	DGS-1520-52MP	*100 VAC*	*PoE On*	908.2 Watts with RPS
				479.5 Watts without RPS
			PoE Off	66.3 Watts

Physical Specifications				
		240 VAC	*PoE On*	858.9 Watts with RPS
				455.6 Watts without RPS
			PoE Off	65.8 Watts
Power Consumption *(Standby)*	***DGS-1520-28***	*100 VAC*	-	20.9 Watts
		240 VAC	-	21.5 Watts
	DGS-1520-28MP	*100 VAC*	-	37.2 Watts
		240 VAC	-	37.3 Watts
	DGS-1520-52	*100 VAC*	-	25.5 Watts
		240 VAC	-	26.8 Watts
	DGS-1520-52MP	*100 VAC*	-	39.8 Watts
		240 VAC	-	40.7 Watts
MTBF	***DGS-1520-28***	468251.5 Hours (with AC power)		
	DGS-1520-28MP	333945.6 Hours (with AC power)		
	DGS-1520-52	364887.5 Hours (with AC power)		
	DGS-1520-52MP	328173.6 Hours (with AC power)		
Security Lock	Provides a Kensington-compatible security lock, on the rear panel of the Switch, to be able to connect to a secure immovable device. Insert the lock into the notch and turn the key to secure the lock. The lock-and-cable apparatus should be purchased separately			

Environment Specifications	
Feature	**Description**
Temperature	**Operating:** -5°C to 50°C (23°F to 122°F) **Storage:** -40°C to 70°C (-40°F to 158°F)
Humidity	**Operating:** 10 % to 95 % RH (non-condensing) **Storage:** 5 % to 95 % RH (non-condensing)
Altitude	0 to 2000 meters (6562 feet) above sea level

Performance Specification		
Feature	**Description**	
Switching Capacity	***DGS-1520-28***	128 Gbps
	DGS-1520-28MP	140 Gbps
	DGS-1520-52	176 Gbps
	DGS-1520-52MP	188 Gbps
MAC Address Table	Up to 16K entries (512 static MAC addresses)	
Transmission Method	Store and forward	
Packet Buffer	***DGS-1520-28***	2 MB
	DGS-1520-28MP	2 MB
	DGS-1520-52	2 MB (x2)
	DGS-1520-52MP	2 MB (x2)
Packet Forwarding Rate *(Maximum)*	***DGS-1520-28***	95.24 Mpps
	DGS-1520-28MP	104.16 Mpps

Performance Specification		
	DGS-1520-52	130.95 Mpps
	DGS-1520-52MP	139.88 Mpps
Priority Queues	Supports the following: • Up to 8 Priority Queues per port	
Physical Stacking	Supports the following: • Physical stacking through the last 4 ports on the front panel • Stacking configurations: 2-port 10GBASE-T, 2-port SFP+, or 4-port • Linear/Ring bi-directional redundant stacking topologies • Up to 40 Gbps or 80 Gbps full-duplex bandwidth • Up to 8 physical units per stack • Backup master for redundancy • Inter-stacking trunking and mirroring	
Virtual Stacking *(Clustering)*	Supports the following: • D-Link Single IP Management (Version 1.6) • Manage Up to 32 devices in a virtual stack with a single IP address	

Port Type Specifications		
Feature	**Description**	
Console Port	The RJ45 console port provides out-of-band access to the CLI using the following settings:	
	Baud Rate	115200 (default), 19200, 38400, and 9600 bps
	Data Bits	8
	Stop Bit	1
	Parity	None
	Flow Control	None
RJ45 Ports	The RJ45 Ethernet ports provides in-band access to the CLI and Web UI, interconnect nodes, and support the following standards and features:	
	Standards	IEEE 802.3 (10BASE-T) IEEE 802.3u (100BASE-TX) IEEE 802.3ab (1000BASE-T) IEEE 802.3bz (2.5GBASE-T) (*28MP/52MP Only)* IEEE 802.3an (10GBASE-T) IEEE 802.3az (Energy-Efficient Ethernet) IEEE 802.3x (Full-Duplex, Flow Control)
	The following features are supported on the RJ45 ports: • Half/Full-Duplex operations on 10BASE-T and 100BASE-TX ports • Back Pressure for Half-Duplex mode • Head-of-line blocking prevention • Manual/auto MDI/MDIX configuration • Auto-Negotiation for each port	
SFP+ Ports	The SFP+ transceiver ports provides in-band access to the CLI and Web UI, interlink network segments, and support the following standards and features:	
	Standards	IEEE 802.3z (1000BASE-X) IEEE 802.3ah (1000BASE-BX10) IEEE 802.3ae (10GBASE-R)

Port Type Specifications				
	All SFP+ port are backwards compatible to support SFP transceivers. For the full list of D-Link transceivers that are supported on the Switch, refer to the **Supported SFP/SFP+ Transceivers** table on page 33.			
PoE Ports *(DGS-1520-28MP/52MP Only)*	The PoE ports on the front panels of the Switch can supply PDs with DC power over the Ethernet cables connecting them.			
	Standards	IEEE 802.3af (Power over Ethernet, 15.4 Watt) IEEE 802.3at (Power over Ethernet, 30 Watt)		
	The following features are supported on the PoE ports: • Automatically recognizes the PD connection and immediately provides power using the Auto-Discovery feature • Automatically disables only the port(s) with a current over 350/600 mA for IEEE 802.3af/at with a minimum voltage output of 44/50 V • Automatically disables only the port(s) with a short using the Active Circuit Protection feature • Priority configurable between Low, Medium, and High. Default is Low. • Prevents cross-port current leakage in a multi-port system with DC isolation through the termination circuitry			
	The following classifications apply to IEEE 802.3af/at-capable devices:			
	Class	**Usage**	**Guaranteed Output Power By PSE**	
	0	Default	15.4 Watt	
	1	Optional	4.0 Watt	
	2	Optional	7.0 Watt	
	3	Optional	15.4 Watt	
	4	Optional (802.3at Only)	30 Watt	
	The total PoE power budget is 370 Watts. The total PoE power budget with an RPS (DPS-700) is 740 Watts.			
MGMT Port *(DGS-1520-28/52 Only)*	This port provides out-of-band Telnet, Web, and SNMP access to the Switch. This port can receive 90W Power over HDBaseT power to the Switch.			
	Standards	Power over HDBaseT (PoH) IEEE 802.3 (10BASE-T) IEEE 802.3u (100BASE-TX) IEEE 802.3ab (1000BASE-T) IEEE 802.3x (Full-Duplex, Flow Control)		
	The following classifications apply to HDBaseT-capable devices:			
	Classification		**PSE Guaranteed Output Power**	**PD Maximum Input Power**
	4 (4-pair) Default Type 4		90 Watt	71 Watt

Supported SFP/SFP+ Transceivers					
SFP Fiber Transceivers					
Product Code	***Standard***	***Mode***	***Distance***	***TX***	***RX***
DEM-310GT	1000BASE-LX	Single-mode	10 km	1310 nm	
DEM-311GT	1000BASE-SX	Multi-mode	550 m	850 nm	
DEM-312GT2	1000BASE-SX	Multi-mode	2 km	1310 nm	
DEM-314GT	1000BASE-LHX	Single-mode	50 km	1550 nm	

Supported SFP/SFP+ Transceivers						
DEM-315GT	1000BASE-ZX	Single-mode	80 km	1550 nm		
SFP+ Fiber Transceivers						
Product Code	***Standard***	***Mode***	***Distance***	***TX***	***RX***	
DEM-431XT	10GBASE-SR	Multi-mode	300 m	850 nm		
DEM-432XT	10GBASE-LR	Single-mode	10 km	1310 nm		
DEM-433XT	10GBASE-ER	Single-mode	40 km	1550 nm		
DEM-434XT	10GBASE-ZR	Single-mode	80 km	1550 nm		
SFP Copper Transceivers						
Product Code	***Standard***	***Connector***	***Distance***	***TX/RX***	***Power***	***Amps***
DGS-712	1000BASE-T	SFP to RJ45	100 m	-	3.3 V	375 mA
WDM (BiDi) SFP Transceivers						
Product Code	***Standard***	***Mode***	***Distance***	***TX***	***RX***	
DEM-330T	1000BASE-BX-D	Single-mode	10 km	1550 nm	1310 nm	
DEM-330R	1000BASE-BX-U	Single-mode	10 km	1310 nm	1550 nm	
DEM-331T	1000BASE-BX-D	Single-mode	40 km	1550 nm	1310 nm	
DEM-331R	1000BASE-BX-U	Single-mode	40 km	1310 nm	1550 nm	
WDM (BiDi) SFP+ Transceivers						
Product Code	***Standard***	***Mode***	***Distance***	***TX***	***RX***	
DEM-436XT-BXD	10GBASE-LR	Single-mode	20 km	1330 nm	1270 nm	
DEM-436XT-BXU	10GBASE-LR	Single-mode	20 km	1270 nm	1310 nm	
SFP+ Direct Attached Cables (DAC)						
Product Code	***Standard***	***Cable***	***Dist.***	***Wire***	***Ω***	***Amps***
DEM-CB100S	10G SFP+	Twinaxial	1 m	30 AWG	100 Ω	0.5 A
DEM-CB300S	10G SFP+	Twinaxial	3 m	30 AWG	100 Ω	0.5 A
DEM-CB700S	10G SFP+	Twinaxial	7 m	30 AWG	100 Ω	0.5 A

Certifications	
EMC Certifications	CE Class A, FCC Class A, VCCI Report Class A, C-Tick Report Class A, BSMI
Safety Certifications	UL Mark (62368-1), CB Report (IEC60950-1), CB Report (IEC62368-1), LVD Report (62368-1), BSMI

Appendix B - Cables and Connectors

Ethernet Cable

When connecting the Switch to another switch, a bridge, or hub, a straight-through Category 5/5e/6a/7 cable is necessary. The following diagrams and tables show the standard RJ45 receptacle/connector and their pin assignments.

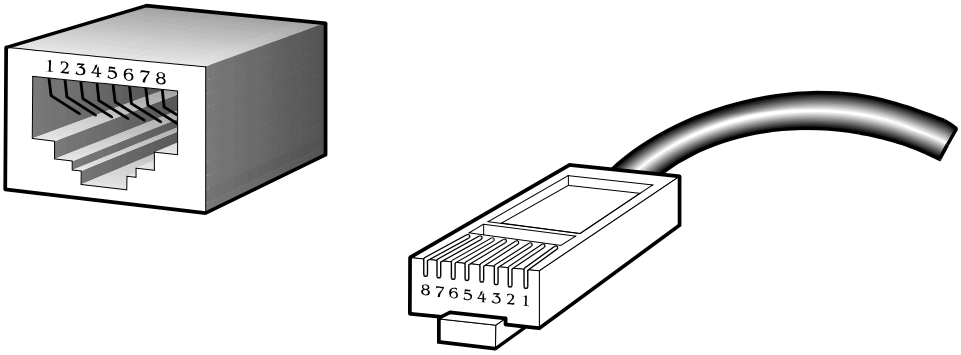

Figure B-1 Standard RJ45 port and connector

RJ45 Pin Assignment:

Contact	MDI-X Port	MDI-II Port
1	RD+ (receive)	TD+ (transmit)
2	RD - (receive)	TD - (transmit)
3	TD+ (transmit)	RD+ (receive)
4	1000BASE-T/10GBASE-T	1000BASE-T/10GBASE-T
5	1000BASE-T/10GBASE-T	1000BASE-T/10GBASE-T
6	TD - (transmit)	RD- (receive)
7	1000BASE-T/10GBASE-T	1000BASE-T/10GBASE-T
8	1000BASE-T/10GBASE-T	1000BASE-T/10GBASE-T

Console Cable

A console cable is used to connect to the RJ45 console port of the Switch to access the command line interface. The following diagram and table show the standard RJ45 to RS-232cable and pin assignments.

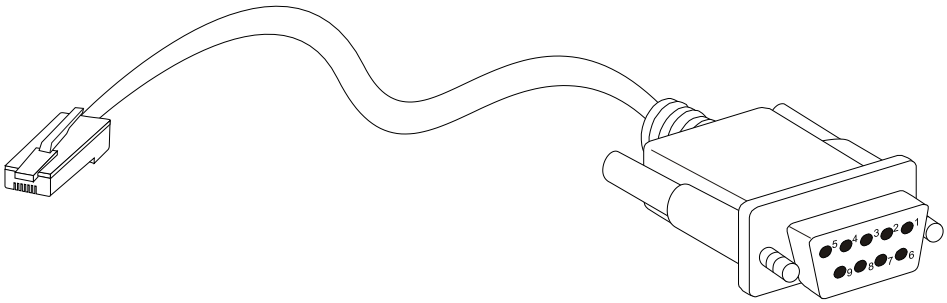

Figure B-2 Console to RJ45 Cable

RJ45 to RS-232 Cable Pin Assignment Table:

Contact	Console (DB9/RS232)	RJ45
1	Not Used	Not Used
2	RXD	Not Used
3	TXD	TXD
4	Not Used	GND
5	GND (shared)	GND
6	Not Used	RXD
7	Not Used	Not Used
8	Not Used	Not Used

Redundant Power Supply (RPS) Cable

When connecting the Switch to a Redundant Power Supply, an RPS cable is necessary. The following diagram and table show the standard RPS receptacle/connector and their pin assignments.

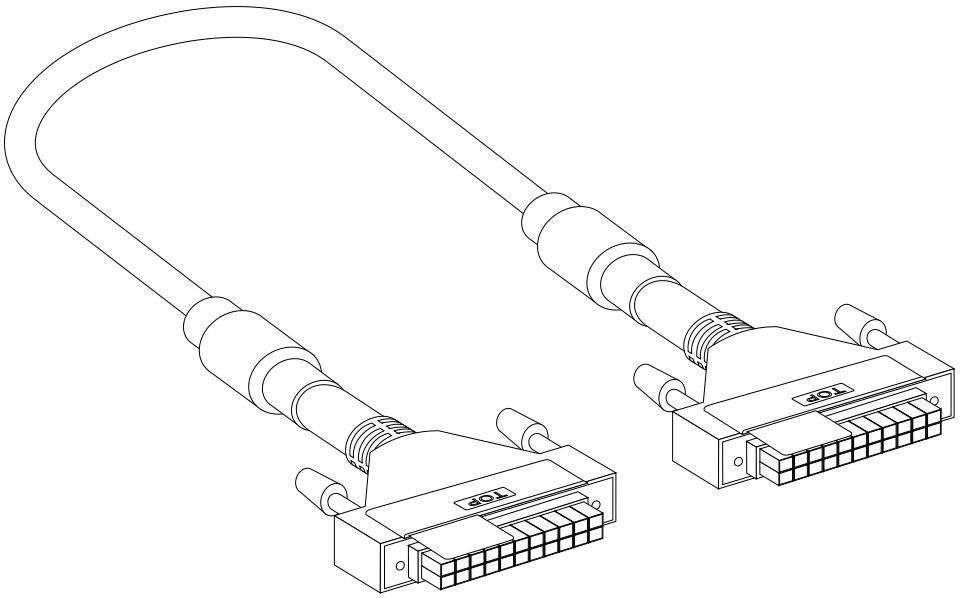

Figure B-3 RPS 22-pin DC Power Cable

RPS 22-pin DC Power Cable Pin Assignment Table:

Pin	Switch	RPS
1	-54Vrtn	-54Vrtn
2	-54V	-54V
3	+12V	+12V
4	+12V	+12V
5	+12V	+12V
6	+12V	+12V
7	NC/GND	GND
8	+12Ven	+12Ven
9	LS-54V	LS-54V
10	-54V	-54V
11	-54Vrtn	-54Vrtn
12	GND	NC/GND
13	GND	GND
14	RPS Present	Status_2
15	Status_1	RPS PG
16	Status_2	RPS Present
17	RPS PG	Status_1
18	GND	GND
19	+12VRTNsen	+12VRTNsen
20	LS+12V	LS+12V
21	-54Vsen	-54Vsen
22	-54VRTNsen	-54VRTNsen

Appendix C - ERPS Information

Only hardware-based ERPS supports the Fast Link Drop Interrupt feature with a recovery time of 50 milliseconds in a 16-node ring. The distance must be less than 1200 kilometers.

Model Name	ERPS	Port 1 to 8	Port 9 to 26	Port 27 to 28
DGS-1520-28	Hardware-based	V		V
	Software-based		V	

Model Name	ERPS	Port 1 to 4	Port 5 to 26	Port 27 to 28
DGS-1520-28MP	Hardware-based	V		V
	Software-based		V	

Model Name	ERPS	Port 1 to 8	Port 9 to 24	Port 25 to 32	Port 33 to 50	Port 51 to 52
DGS-1520-52	Hardware-based	V		V		V
	Software-based		V		V	

Model Name	ERPS	Port 1 to 8	Port 9 to 24	Port 25 to 28	Port 29 to 50	Port 51 to 52
DGS-1520-52MP	Hardware-based	V		V		V
	Software-based		V		V	

Safety/Sécurité

Safety Instructions
Consignes de sécurité
General Precautions for Rack-Mountable Products
Protecting Against Electrostatic Discharge

Safety Instructions

Please pay careful attention to the following safety guidelines to ensure your own personal safety and to help protect your system from potential damage.

Safety Cautions

To greatly reduce the risk of physical injury, electrical shock, fire, and damage to equipment, observe the following precautions.

Observe and follow service markings.

- Do not attempt to service any product, except when it is explained in the system's documentation.
- Opening or removing covers, marked with a high voltage sign, may expose the user to electrical shock.
- Only a trained service technician should service components inside these compartments.

If any of the following conditions occur, unplug the product from the electrical outlet and replace the part or contact your trained service provider:

- Damage to the power cable, extension cable, or plug.
- An object has fallen into the product.
- The product has been exposed to water.
- The product has been dropped or damaged.
- The product does not operate correctly when the operating instructions are correctly followed.

General safety cautions:

- Electrical Hazard: Only qualified personnel should perform installation procedures.
- Before servicing, disconnect all power cords to remove power from the device.
- Keep the system away from radiators and heat sources. Also, do not block cooling vents.
- Do not spill food or liquids on system components, and never operate the product in a wet environment. If the system gets wet, contact your trained service provider.
- Do not push any objects into the openings of the system. Doing so can cause fire or electric shock by shorting out interior components.
- Only use this product with approved equipment.
- Allow the product to cool before removing the cover or touching internal components.
- Operate the product only from the type of external power source indicated on the electrical ratings label. If unsure of the type of power source required, consult your service provider or local power company.
- Be sure that attached devices are electrically rated to operate with the power available in your location.
- Use only approved power cable(s). If you have not been provided with a power cable for your system or for any AC-powered option intended for your system, purchase a power cable that is approved for use in your country. The power cable must be rated for the product and for the voltage and current marked on the product's electrical ratings label. The voltage and current rating of the cable should be greater than the ratings marked on the product.
- To help prevent electric shock, plug the system and peripheral power cables into properly grounded electrical outlets. These cables are equipped with three-prong plugs to help ensure proper grounding. Do not use adapter plugs or remove the grounding prong from a cable. If using an extension cable is necessary, use a 3-wire cable with properly grounded plugs.

- Observe the extension cable and power strip ratings. Make sure that the total ampere rating of all products plugged into the extension cable or power strip does not exceed 80 percent of the ampere ratings limit for the extension cable or power strip.
- To help protect the system from sudden, transient increases and decreases in electrical power, use a surge suppressor, line conditioner, or uninterruptible power supply (UPS).
- Position system cables and power cables carefully. Route cables so that they cannot be stepped on or tripped over. Be sure that nothing rests on any cables.
- Do not modify power cables or plugs. Consult a licensed electrician or your power company for site modifications. Always follow your local or national wiring rules.

When connecting or disconnecting power to and from hot-pluggable power supplies, observe the following guidelines:

- Install the power supply before connecting the power cable to the power supply.
- Unplug the power cable before removing the power supply.
- If the system has multiple sources of power, disconnect power from the system by unplugging all power cables from the power supplies.
- Move products with care and ensure that all casters and stabilizers are firmly connected to the system. Avoid sudden stops and uneven surfaces.

To help avoid damage to the system, be sure that the voltage selection switch, on the power supply, is set to match the power available at the Switch's location:

- 115V/60Hz is used mostly in North and South America as well as Far Eastern countries like as South Korea and Taiwan
- 100V/50Hz is used mostly in Eastern Japan and 100V/60Hz in Western Japan
- 230V/50Hz is used mostly in Europe, the Middle East, Africa and the Far East

Consignes de sécurité

Veuillez prêter une attention particulière aux consignes de sécurité suivantes pour assurer votre sécurité personnelle et protéger votre système des dommages potentiels.

Précautions de sécurité

Pour réduire considérablement les risques de blessure physique, de choc électrique, d'incendie et de détérioration du matériel, observez les précautions suivantes.

Observez et respectez les marquages relatifs à l'entretien et/ou aux réparations.

- N'essayez pas de réparer un produit, sauf si cela est expliqué dans la documentation du système.
- L'ouverture ou le retrait des capots, signalés par un symbole de haute tension, peut exposer l'utilisateur à un choc électrique.
- Seul un technicien de maintenance qualifié est habilité à réparer les composants à l'intérieur de ces compartiments.

Si l'un des cas suivants se produit, débranchez l'appareil du secteur et remplacez la pièce concernée ou contactez votre prestataire de services agréé.

- Endommagement du câble d'alimentation, du câble de rallonge ou de la fiche.
- Un objet est tombé dans le produit.
- Le produit a été exposé à l'eau.
- Le produit est tombé ou a été endommagé.
- Le produit ne fonctionne pas correctement lorsque les instructions d'utilisation sont correctement suivies.

Précautions générales de sécurité:

- Danger électrique: Seul le personnel qualifié doit effectuer les procédures d'installation.

- Avant de procéder à l'entretien, débranchez tous les cordons d'alimentation pour mettre le périphérique hors tension.
- Eloignez le système des radiateurs et des sources de chaleur. Par ailleurs, n'obturez pas les fentes d'aération.
- Ne versez pas de liquide sur les composants du système et n'introduisez pas de nourriture à l'intérieur. Ne faites jamais fonctionner l'appareil dans un environnement humide. Si le système est mouillé, contactez votre prestataire de services qualifié.
- N'insérez aucun objet dans les fentes de l'appareil. Vous risqueriez de provoquer un incendie ou un choc électrique en court-circuitant les composants internes.
- Utilisez ce produit uniquement avec un équipement approuvé.
- Laissez l'appareil refroidir avant de déposer le capot ou de toucher les composants internes.
- Faites fonctionner le produit uniquement avec la source d'alimentation indiquée sur l'étiquette signalétique où figurent les caractéristiques électriques nominales. Si vous ne savez pas avec certitude quel type de source d'alimentation est requis, consultez votre prestataire de services ou votre compagnie d'électricité.
- Assurez-vous que les caractéristiques nominales des appareils branchés correspondant à la tension du réseau électrique.
- Utilisez uniquement des câbles d'alimentation homologués. Si un câble d'alimentation n'est pas fourni pour le système ou pour un composant/accessoire alimenté par CA destiné au système, procurez-vous un câble d'alimentation homologué pour une utilisation dans votre pays. Le câble d'alimentation doit être adapté à l'appareil et ses caractéristiques nominales doivent correspondre à celles figurant sur l'étiquette du produit. La tension et le courant nominaux du câble doivent être supérieurs aux valeurs nominales indiquées sur l'appareil.
- Pour éviter tout risque de choc électrique, branchez les câbles d'alimentation du système et des périphériques à des prises électriques correctement mises à la masse. Ces câbles sont équipés de fiches à trois broches pour garantir une mise à la masse appropriée. N'utilisez pas d'adaptateur de prise, et n'éliminez pas la broche de mise à la masse du câble. Si un câble de rallonge est nécessaire, utilisez un câble à 3 fils avec des fiches correctement mises à la terre.
- Respectez les caractéristiques nominales de la rallonge ou du bloc multiprise. Assurez-vous que l'intensité nominale totale de tous les produits branchés à la rallonge ou au bloc multiprise ne dépasse pas 80 % de l'intensité nominale limite de la rallonge ou du bloc multiprise.
- Pour protéger le système contre les pics et les chutes de tension transitoires et soudains, utilisez un parasurtenseur, un filtre de secteur ou une alimentation sans interruption (ASI).
- Positionnez les câbles système et les câbles d'alimentation avec soin. Acheminez les câbles de manière à ce qu'ils ne puissent pas être piétinés ou trébuchés. Veillez à ce que rien ne repose sur les câbles.
- Ne modifiez pas les câbles ou les fiches d'alimentation. Contactez un électricien qualifié ou la compagnie d'électricité si des modifications sur site sont nécessaires. Respectez toujours la règlementation locale ou nationale en matière de câblage.

Lors de la connexion ou de la déconnexion de l'alimentation vers et depuis des blocs d'alimentation enfichables à chaud, respectez les consignes suivantes:

- Installez l'alimentation avant d'y brancher le câble d'alimentation.
- Débranchez le câble d'alimentation avant de couper l'alimentation.
- Si le système possède plusieurs sources d'alimentation, mettez-le hors tension en débranchant tous les câbles d'alimentation des prises.
- Déplacez les appareils avec précaution et assurez-vous que les roulettes et/ou que les pieds stabilisateurs sont bien fixés au système. Évitez les arrêts brusques et les surfaces inégales.

Pour éviter d'endommager le système, assurez-vous que le commutateur de sélection de tension de l'alimentation est réglé sur l'alimentation disponible à l'emplacement du commutateur:

- 115 V/60 Hz est principalement utilisé en Amérique du Nord et du Sud, ainsi que dans des pays d'Extrême-Orient tels que la Corée du Sud et Taïwan.
- 100 V/50 Hz est utilisé principalement dans l'est du Japon et 100 V/ 60 Hz dans l'ouest du Japon.
- 230 V/50 Hz est principalement utilisé en Europe, au Moyen-Orient, en Afrique et en Extrême-Orient.

General Precautions for Rack-Mountable Products

Please pay careful attention to the following precautions concerning rack stability and safety. Systems are considered to be components in a rack. Thus, a component refers to any system, as well as to various peripherals or supporting hardware:

CAUTION: Installing systems in a rack without the front and side stabilizers installed could cause the rack to tip over, potentially resulting in bodily injury under certain circumstances. Therefore, always install the stabilizers before installing components in the rack. After installing system/components in a rack, never pull more than one component out of the rack on its slide assemblies at one time. The weight of more than one extended component could cause the rack to tip over and may result in serious injury.

ATTENTION: Le montage de systèmes sur un rack dépourvu de pieds stabilisateurs avant et latéraux peut faire basculer le rack, pouvant causer des dommages corporels dans certains cas. Par conséquent, installez toujours les pieds stabilisateurs avant de monter des composants sur le rack. Après l'installation d'un système ou de composants dans un rack, ne sortez jamais plus d'un composant à la fois hors du rack sur ses glissières. Le poids de plusieurs composants sur les glissières en extension peut faire basculer le rack, pouvant causer de graves dommages corporels.

- Before working on the rack, make sure that the stabilizers are secured to the rack, extended to the floor, and that the full weight of the rack rests on the floor. Install front and side stabilizers on a single rack or front stabilizers for joined multiple racks before working on the rack.
- Always load the rack from the bottom up, and load the heaviest item in the rack first.
- Make sure that the rack is level and stable before extending a component from the rack.
- Use caution when pressing the component rail release latches and sliding a component into or out of a rack; the slide rails can pinch your fingers.
- After a component is inserted into the rack, carefully extend the rail into a locking position, and then slide the component into the rack.
- Do not overload the AC supply branch circuit that provides power to the rack. The total rack load should not exceed 80 percent of the branch circuit rating.
- Ensure that proper airflow is provided to components in the rack.
- Do not step on or stand on any component when servicing other components in a rack.

CAUTION: Never defeat the ground conductor or operate the equipment in the absence of a suitably installed ground conductor. Contact the appropriate electrical inspection authority or an electrician if uncertain that suitable grounding is available.

ATTENTION: Ne neutralisez jamais le conducteur de masse et ne faites jamais fonctionner le matériel en l'absence de conducteur de masse dûment installé. Contactez l'organisme de contrôle en électricité approprié ou un électricien qualifié si vous n'êtes pas sûr qu'un système de mise à la masse adéquat soit disponible.

CAUTION: The system chassis must be positively grounded to the rack cabinet frame. Do not attempt to connect power to the system until grounding cables are connected. Completed power and safety ground wiring must be inspected by a qualified electrical inspector. An energy hazard will exist if the safety ground cable is omitted or disconnected.

ATTENTION: La carcasse du système doit être positivement reliée à la masse du cadre du rack. N'essayez pas de mettre le système sous tension si les câbles de mise à la masse ne sont pas raccordés. Le câblage de l'alimentation et de la mise à la masse de sécurité doit être inspecté par un inspecteur qualifié en électricité. Un risque électrique existe si le câble de mise à la masse de sécurité est omis ou débranché.

Protecting Against Electrostatic Discharge

Static electricity can harm delicate components inside the system. To prevent static damage, discharge static electricity from your body before touching any of the electronic components, such as the microprocessor. This can be done by periodically touching an unpainted metal surface on the chassis.

The following steps can also be taken prevent damage from electrostatic discharge (ESD):

- When unpacking a static-sensitive component from its shipping carton, do not remove the component from the antistatic packing material until ready to install the component in the system. Just before unwrapping the antistatic packaging, be sure to discharge static electricity from your body.
- When transporting a sensitive component, first place it in an antistatic container or packaging.
- Handle all sensitive components in a static-safe area. If possible, use antistatic floor pads, workbench pads and an antistatic grounding strap.

D-Link®
Building Networks for People

Limited Warranty
(USA Only)

Subject to the terms and conditions set forth herein, D-Link Systems, Inc. ("D-Link") provides this Limited Warranty:

- Only to the person or entity that originally purchased the product from D-Link or its authorized reseller or distributor, and
- Only for products purchased and delivered within the fifty states of the United States, the District of Columbia, U.S. Possessions or Protectorates, U.S. Military Installations, or addresses with an APO or FPO.

Limited Warranty: D-Link warrants that the hardware portion of the D-Link product described below ("Hardware") will be free from material defects in workmanship and materials under normal use from the date of original retail purchase of the product, for the period set forth below ("Warranty Period"), except as otherwise stated herein.

Limited Lifetime Warranty for the product is defined as follows:

- Hardware: For as long as the original customer/end user owns the product, or five (5) years after product discontinuance, whichever occurs first (excluding power supplies and fans)
- Power supplies and fans: Three (3) Year
- Spare parts and spare kits: Ninety (90) days

The customer's sole and exclusive remedy and the entire liability of D-Link and its suppliers under this Limited Warranty will be, at D-Link's option, to repair or replace the defective Hardware during the Warranty Period at no charge to the original owner or to refund the actual purchase price paid. Any repair or replacement will be rendered by D-Link at an Authorized D-Link Service Office. The replacement hardware need not be new or have an identical make, model or part. D-Link may, at its option, replace the defective Hardware or any part thereof with any reconditioned product that D-Link reasonably determines is substantially equivalent (or superior) in all material respects to the defective Hardware. Repaired or replacement hardware will be warranted for the remainder of the original Warranty Period or ninety (90) days, whichever is longer, and is subject to the same limitations and exclusions. If a material defect is incapable of correction, or if D-Link determines that it is not practical to repair or replace the defective Hardware, the actual price paid by the original purchaser for the defective Hardware will be refunded by D-Link upon return to D-Link of the defective Hardware. All Hardware or part thereof that is replaced by D-Link, or for which the purchase price is refunded, shall become the property of D-Link upon replacement or refund.

Limited Software Warranty: D-Link warrants that the software portion of the product ("Software") will substantially conform to D-Link's then current functional specifications for the Software, as set forth in the applicable documentation, from the date of original retail purchase of the Software for a period of ninety (90) days ("Software Warranty Period"), provided that the Software is properly installed on approved hardware and operated as contemplated in its documentation. D-Link further warrants that, during the Software Warranty Period, the magnetic media on which D-Link delivers the Software will be free of physical defects. The customer's sole and exclusive remedy and the entire liability of D-Link and its suppliers under this Limited Warranty will be, at D-Link's option, to replace the non-conforming Software (or defective media) with software that substantially conforms to D-Link's functional specifications for the Software or to refund the portion of the actual purchase price paid that is attributable to the Software. Except as otherwise agreed by D-Link in writing, the replacement Software is provided only to the original licensee, and is subject to the terms and conditions of the license granted by D-Link for the Software. Replacement Software will be warranted for the remainder of the original Warranty Period and is subject to the same limitations and exclusions. If a material non-conformance is incapable of correction, or if D-Link determines in its sole discretion that it is not practical to replace the non-conforming Software, the price paid by the original licensee for the non-conforming Software will be refunded by D-Link; provided that the non-conforming Software (and all copies thereof) is first returned to D-Link. The license granted respecting any Software for which a refund is given automatically terminates.

Non-Applicability of Warranty: The Limited Warranty provided hereunder for Hardware and Software portions of D-Link's products will not be applied to and does not cover any refurbished product and any product purchased through the inventory clearance or liquidation sale or other sales in which D-Link, the sellers, or the liquidators expressly disclaim their warranty obligation pertaining to the product and in that case, the product is being sold "As-Is" without any warranty whatsoever including, without limitation, the Limited Warranty as described herein, notwithstanding anything stated herein to the contrary.

Submitting A Claim: The customer shall return the product to the original purchase point based on its return policy. In case the return policy period has expired and the product is within warranty, the customer shall submit a claim to D-Link as outlined below:

- The customer must submit with the product as part of the claim a written description of the Hardware defect or Software nonconformance in sufficient detail to allow D-Link to confirm the same, along with proof of purchase of the product (such as a copy of the dated purchase invoice for the product) if the product is not registered.
- The customer must obtain a Case ID Number from D-Link Technical Support at 1-877-453-5465, who will attempt to assist the customer in resolving any suspected defects with the product. If the product is considered defective, the customer must obtain a Return Material Authorization ("RMA") number by completing the RMA form and entering the assigned Case ID Number at https://rma.dlink.com/.
- After an RMA number is issued, the defective product must be packaged securely in the original or other suitable shipping package to ensure that it will not be damaged in transit, and the RMA number must be prominently marked on the outside of the package. Do not include any manuals or accessories in the shipping package. D-Link will only replace the defective portion of the product and will not ship back any accessories.
- The customer is responsible for all in-bound shipping charges to D-Link. No Cash on Delivery ("COD") is allowed. Products sent COD will either be rejected by D-Link or become the property of D-Link. Products shall be fully insured by the customer and shipped to **D-Link Systems, Inc., 17595 Mt. Herrmann, Fountain Valley, CA 92708**. D-Link will not be held responsible for any packages that are lost in transit to D-Link. The repaired or replaced packages will be shipped to the customer via UPS Ground or any common carrier selected by D-Link. Return shipping charges shall be prepaid by D-Link if you use an address in the United States, otherwise we will ship the product to you freight collect. Expedited shipping is available upon request and provided shipping charges are prepaid by the customer.

D-Link may reject or return any product that is not packaged and shipped in strict compliance with the foregoing requirements, or for which an RMA number is not visible from the outside of the package. The product owner agrees to pay D-Link's reasonable handling and return shipping charges for any product that is not packaged and shipped in accordance with the foregoing requirements, or that is determined by D-Link not to be defective or non-conforming.

What Is Not Covered: The Limited Warranty provided herein by D-Link does not cover: Products that, in D-Link's judgment, have been subjected to abuse, accident, alteration, modification, tampering, negligence, misuse, faulty installation, lack of reasonable care, repair or service in any way that is not contemplated in the documentation for the product, or if the model or serial number has been altered, tampered with, defaced or removed; Initial installation, installation and removal of the product for repair, and shipping costs; Operational adjustments covered in the operating manual for the product, and normal maintenance; Damage that occurs in shipment, due to act of God, failures due to power surge, and cosmetic damage; Any hardware, software, firmware or other products or services provided by anyone other than D-Link; and Products that have been purchased from inventory clearance or liquidation sales or other sales in which D-Link, the sellers, or the liquidators expressly disclaim their warranty obligation pertaining to the product. While necessary maintenance or repairs on your Product can be performed by any company, we recommend that you use only an Authorized D-Link Service Office. Improper or incorrectly performed maintenance or repair voids this Limited Warranty.

Disclaimer of Other Warranties: EXCEPT FOR THE LIMITED WARRANTY SPECIFIED HEREIN, THE PRODUCT IS PROVIDED "AS-IS" WITHOUT ANY WARRANTY OF ANY KIND WHATSOEVER INCLUDING, WITHOUT LIMITATION, ANY WARRANTY OF MERCHANTABILITY, FITNESS FOR A PARTICULAR PURPOSE AND NON-INFRINGEMENT. IF ANY IMPLIED WARRANTY CANNOT BE DISCLAIMED IN ANY TERRITORY WHERE A PRODUCT IS SOLD, THE DURATION OF SUCH IMPLIED WARRANTY SHALL BE LIMITED TO NINETY (90) DAYS. EXCEPT AS EXPRESSLY COVERED UNDER THE LIMITED WARRANTY PROVIDED HEREIN, THE ENTIRE RISK AS TO THE QUALITY, SELECTION AND PERFORMANCE OF THE PRODUCT IS WITH THE PURCHASER OF THE PRODUCT.

Limitation of Liability: TO THE MAXIMUM EXTENT PERMITTED BY LAW, D-LINK IS NOT LIABLE UNDER ANY CONTRACT, NEGLIGENCE, STRICT LIABILITY OR OTHER LEGAL OR EQUITABLE THEORY FOR ANY LOSS OF USE OF THE PRODUCT, INCONVENIENCE OR DAMAGES OF ANY CHARACTER, WHETHER DIRECT, SPECIAL, INCIDENTAL OR CONSEQUENTIAL (INCLUDING, BUT NOT LIMITED TO, DAMAGES FOR LOSS OF GOODWILL, LOSS OF REVENUE OR PROFIT, WORK STOPPAGE, COMPUTER FAILURE OR MALFUNCTION, FAILURE OF OTHER EQUIPMENT OR COMPUTER PROGRAMS TO WHICH D-LINK'S PRODUCT IS CONNECTED WITH, LOSS OF INFORMATION OR DATA CONTAINED IN, STORED ON, OR INTEGRATED WITH ANY PRODUCT RETURNED TO D-LINK FOR WARRANTY SERVICE) RESULTING FROM THE USE OF THE PRODUCT, RELATING TO WARRANTY SERVICE, OR ARISING OUT OF ANY BREACH OF THIS LIMITED WARRANTY, EVEN IF D-LINK HAS BEEN ADVISED OF THE POSSIBILITY OF SUCH DAMAGES. THE SOLE REMEDY FOR A BREACH OF THE FOREGOING LIMITED WARRANTY IS REPAIR, REPLACEMENT OR REFUND OF THE DEFECTIVE OR NON-CONFORMING PRODUCT. THE MAXIMUM LIABILITY OF D-LINK UNDER THIS WARRANTY IS LIMITED TO THE PURCHASE PRICE OF THE PRODUCT COVERED BY THE WARRANTY. THE FOREGOING EXPRESS WRITTEN WARRANTIES AND REMEDIES ARE EXCLUSIVE AND ARE IN LIEU OF ANY OTHER WARRANTIES OR REMEDIES, EXPRESS, IMPLIED OR STATUTORY.

Governing Law: This Limited Warranty shall be governed by the laws of the State of California. Some states do not allow exclusion or limitation of incidental or consequential damages, or limitations on how long an implied warranty lasts, so the foregoing limitations and exclusions may not apply. This Limited Warranty provides specific legal rights and you may also have other rights which vary from state to state.

Trademarks: D-Link is a registered trademark of D-Link Systems, Inc. Other trademarks or registered trademarks are the property of their respective owners.

Copyright Statement: No part of this publication or documentation accompanying this product may be reproduced in any form or by any means or used to make any derivative such as translation, transformation, or adaptation without permission from D-Link Corporation/D-Link Systems, Inc., as stipulated by the United States Copyright Act of 1976 and any amendments thereto. Contents are subject to change without prior notice. Copyright 2004 by D-Link Corporation/D-Link Systems, Inc. All rights reserved.

CE Mark Warning: This is a Class A product. In a residential environment, this product may cause radio interference, in which case the user may be required to take adequate measures.

FCC Statement: This equipment has been tested and found to comply with the limits for a Class A digital device, pursuant to part 15 of the FCC Rules. These limits are designed to provide reasonable protection against harmful interference in a commercial installation. This equipment generates, uses, and can radiate radio frequency energy and, if not installed and used in accordance with the instructions, may cause harmful interference to radio communication. However, there is no guarantee that interference will not occur in a particular installation. Operation of this equipment in a residential environment is likely to cause harmful interference to radio or television reception. If this equipment does cause harmful interference to radio or television reception, which can be determined by turning the equipment off and on, the user is encouraged to try to correct the interference by one or more of the following measures**:**

- Reorient or relocate the receiving antenna.
- Increase the separation between the equipment and receiver.
- Connect the equipment into an outlet on a circuit different from that to which the receiver is connected.
- Consult the dealer or an experienced radio/TV technician for help.

For detailed warranty information applicable to products purchased outside the United States, please contact the corresponding local D-Link office.

Product Registration

Register your D-Link product online at http://support.dlink.com/register/
Product registration is entirely voluntary and failure to complete or return this form will not diminish your warranty rights.

Technical Support

U.S. and Canadian customers

This guide is only for initial configuration. Please refer to the user manual to learn more or visit http://www.mydlink.com for more information. Also feel free to contact us. U.S. and Canadian customers can contact D-Link Technical Support through our website.

USA
http://support.dlink.com

Canada
http://support.dlink.ca

Europe customers

TECHNICAL SUPPORT	**eu.dlink.com/support**
TECHNISCHE UNTERSTÜTZUNG	
ASSISTANCE TECHNIQUE	
ASISTENCIA TÉCNICA	
SUPPORTO TECNICO	
TECHNISCHE ONDERSTEUNING	
POMOC TECHNICZNA	
TECHNICKÁ PODPORA	
TECHNIKAI TÁMOGATÁS	
TEKNISK STØTTE	
TEKNISK SUPPORT	
TEKNINEN TUKI	
TEKNISK SUPPORT	
ASSISTÊNCIA TÉCNICA	
ΤΕΧΝΙΚΉ ΥΠΟΣΤΉΡΙΞΗ	
TEHNIČKA PODRŠKA	
TEHNIČNA PODPORA	
SUPORT TEHNIC	
ТЕХНИЧЕСКА ПОДДРЪЖКА	
TECHNICKÁ PODPORA	

Australia customers

Tel: 1300-700-100
24/7 Technical Support
Web: http://www.dlink.com.au
E-mail: support@dlink.com.au

India customers

Tel: +91-832-2856000 or 1860-233-3999
Web: www.dlink.co.in
E-Mail: helpdesk@in.dlink.com

Singapore, Thailand, Indonesia, Malaysia, Philippines, Vietnam customers

Singapore - www.dlink.com.sg
Thailand - www.dlink.co.th
Indonesia - www.dlink.co.id
Malaysia - www.dlink.com.my
Philippines - www.dlink.com.ph
Vietnam - www.dlink.com.vn

Korea customers

Tel : 1899-3540
Monday to Friday 9:30am to 6:30pm
Web : http://d-link.co.kr
E-mail : support@kr.dlink.com

New Zealand customers

Tel: 0800-900-900
24/7 Technical Support
Web: http://www.dlink.co.nz
E-mail: support@dlink.co.nz

South Africa and Sub Sahara Region customers

Tel: +27 12 661 2025
08600 DLINK (for South Africa only)
Monday to Friday 8:30am to 9:00pm South Africa Time
Web: http://www.d-link.co.za
E-mail: support@za.dlink.com

D-Link Middle East

Dubai, U.A.E.

Tel: +971-4-8809022
Fax: +971-4-8809066 / 8809069
Technical Support: +971-4-8809033
General Inquiries: info.me@me.dlink.com
Tech Support: support.me@me.dlink.com

Egypt:

Technical Support Call Center: +20 2258 66777
General Inquiries: info.eg@me.dlink.com
Tech Support : support.eg@me.dlink.com

Kingdom of Saudi Arabia:

Technical Support:
+966 1121 70009
General Inquiries: info.sa@me.dlink.com
Tech Support: support.sa@me.dlink.com

Pakistan:

Technical Support: +92-21-34548310, 34305069
General Inquiries: info.pk@me.dlink.com
Tech Support: support.pk@me.dlink.com

Morocco:

Phone office: +212 700 13 14 15
Email: morocco@me.dlink.com

Bahrain:

Technical Support: +973 1 3332904
Tech Support: support.me@me.dlink.com

Kuwait:

Tech Support: kuwait@me.dlink.com

Техническая Поддержка

Обновления программного обеспечения и документация доступны на Интернет-сайте D-Link.

D-Link предоставляет бесплатную поддержку для клиентов в течение гарантийного срока.

Клиенты могут обратиться в группу технической поддержки D-Link по телефону или через Интернет.

Техническая поддержка компании D-Link работает в круглосуточном режиме ежедневно, кроме официальных праздничных дней. Звонок бесплатный по всей России.

Техническая поддержка D-Link:

8-800-700-5465

Техническая поддержка через Интернет:

http://www.dlink.ru

e-mail: support@dlink.ru

Изготовитель:

Д-Линк Корпорейшн, 114, Тайвань, Тайпей, Нэйху Дистрикт, Шинху 3-Роуд, № 289

Уполномоченный представитель, импортер:

ООО “Д-Линк Трейд”

390043, г.Рязань, пр. Шабулина, д.16

Тел.: +7 (4912) 503-505

Офисы

Россия
Москва, Графский переулок, 14
Тел. : +7 (495) 744-00-99
E-mail: mail@dlink.ru

Україна
Київ, вул. Межигірська, 87-А
Тел.: +38 (044) 545-64-40
E-mail: ua@dlink.ua

Moldova
Chisinau; str.C.Negruzzi-8
Tel: +373 (22) 80-81-07
E-mail:info@dlink.md

Беларусь
Мінск, пр-т Незалежнасці, 169
Тэл.: +375 (17) 218-13-65
E-mail: support@dlink.by

Қазақстан
Алматы, Құрманғазы к-сі,143 үй
Тел.: +7 (727) 378-55-90
E-mail: almaty@dlink.ru

Հայաստան
Երևան, Դավթաշեն 3-րդ
թաղամաս, 23/5
Հեռ.՝ +374 (10) 39-86-67
Էլ. փոստ՝ info@dlink.am

Latvija
Rīga, Lielirbes iela 27
Tel.: +371 (6) 761-87-03
E-mail: info@dlink.lv

Lietuva
Vilnius, Žirmūnų 139-303
Tel.: +370 (5) 236-36-29
E-mail: info@dlink.lt

Eesti
E-mail: info@dlink.ee

Türkiye
Uphill Towers Residence A/99
Ataşehir /ISTANBUL
Tel: +90 (216) 492-99-99
Email: info.tr@dlink.com.tr

ישראל
20 רח המגשימים
קרית מטלון
פתח תקווה
072-2575555
support@dlink.co.il

Soporte Técnico Para Usuarios En Latino America

Por favor revise el número telefónico del Call Center de su país en
http://www.dlinkla.com/soporte/call-center

Soporte Técnico de D-Link a través de Internet

Horario de atención Soporte Técnico en www.dlinkla.com
e-mail: soporte@dlinkla.com & consultas@dlinkla.com

Clientes de Brasil

Caso tenha dúvidas na instalação do produto, entre em contato com o Suporte Técnico D-Link.

Acesse o site: **www.dlink.com.br/suporte**

D-Link 友訊科技 台灣分公司 技術支援資訊

如果您還有任何本使用手冊無法協助您解決的產品相關問題，台灣、香港或是澳門用戶可至網站、電子郵件或電話等方式與D-Link技術支援工程師聯絡。

台灣D-Link免付費技術諮詢專線

台灣技術諮詢服務專線 0800-002-615

台灣手機付費電話 (02) 6600-0123#8715

台灣網站： http://www.dlink.com.tw

台灣電子郵件： dssqa_service@dlink.com.tw

產品保固期限、台灣技術諮詢時間、維修據點查詢，請參考http://www.dlink.com.tw 網頁說明

香港、澳門D-Link技術諮詢專線

香港技術諮詢服務專線 (852) 8100 8892

香港網站： http://www.dlink.com.hk

香港電子郵件： service@cn.synnex-grp.com

香港、澳門維修據點查詢請參考http://www.dlink.com.hk/contact.html 網頁說明。

如果您是其他地區的用戶，請參考D-Link網站www.dlink.com 查詢全球各地分公司的聯絡資訊以取得相關支援服務。

立即掃描QR code

了解更多

服務資訊

Pelanggan Indonesia

Update perangkat lunak dan dokumentasi pengguna dapat diperoleh pada situs web D-Link.

Dukungan Teknis untuk pelanggan:

Tel: 0800-14014-97 (Layanan Bebas Pulsa)

Dukungan Teknis D-Link melalui Internet:

Pertanyaan Umum: sales@id.dlink.com

Bantuan Teknis: support@id.dlink.com

Website : http://www.dlink.co.id

日本のお客様

この度は弊社製品をお買い上げいただき、誠にありがとうございます。

製品に同梱されている保証書の購入元にお問い合わせください。

中国客户

技术支持中心电话：

400-629-6688(家用産品热线) 4006-828-828(企业産品热线)

技术支持中心邮箱：dlink400@cn.dlink.com

各地维修中心地址请登录官方网站查询

网址：http://www.dlink.com.cn

400电话工作时间：工作日9:00-19:00；节假日9:00-18:00

Registration Card
All Countries and Regions Excluding USA

Print, type or use block letters.

Your name: Mr./Ms_____

Organization: _____ Dept. _____

Your title at organization: _____

Telephone:_____ Fax:_____

Organization's full address: _____

_____

Country: _____

Date of purchase (Month/Day/Year): _____

Product Model	Product Serial No.	* Product installed in type of computer	* Product installed in computer serial No.

(* Applies to adapters only)

Product was purchased from:

Reseller's name: _____

Telephone: _____

Answers to the following questions help us to support your product:

1. Where and how will the product primarily be used?

☐Home ☐Office ☐Travel ☐Company Business ☐Home Business ☐Personal Use

2. How many employees work at installation site?

☐1 employee ☐2-9 ☐10-49 ☐50-99 ☐100-499 ☐500-999 ☐1000 or more

3. What network protocol(s) does your organization use ?

☐XNS/IPX ☐TCP/IP ☐DECnet ☐Others_____

4. What network operating system(s) does your organization use ?

☐D-Link LANsmart ☐Novell NetWare ☐NetWare Lite ☐SCO Unix/Xenix ☐PC NFS ☐3Com 3+Open ☐Cisco Network
☐Banyan Vines ☐DECnet Pathwork ☐Windows NT ☐Windows 98 ☐Windows 2000/ME ☐Windows XP
☐Others_____

5. What network management program does your organization use ?

☐D-View ☐HP OpenView/Windows ☐HP OpenView/Unix ☐SunNet Manager ☐Novell NMS
☐NetView 6000 ☐Others_____

6. What network medium/media does your organization use ?

☐Fiber-optics ☐Thick coax Ethernet ☐Thin coax Ethernet ☐10BASE-T UTP/STP
☐100BASE-TX ☐1000BASE-T ☐Wireless 802.11b and 802.11g ☐wireless 802.11a ☐Others_____

7. What applications are used on your network?

☐Desktop publishing ☐Spreadsheet ☐Word processing ☐CAD/CAM
☐Database management ☐Accounting ☐Others_____

8. What category best describes your company?

☐Aerospace ☐Engineering ☐Education ☐Finance ☐Hospital ☐Legal ☐Insurance/Real Estate ☐Manufacturing
☐Retail/Chain store/Wholesale ☐Government ☐Transportation/Utilities/Communication ☐VAR
☐System house/company ☐Other_____

9. Would you recommend your D-Link product to a friend?

☐Yes ☐No ☐Don't know yet

10. Your comments on this product?

_____

_____

PLEASE
PLACE STAMP
HERE

TO:

D-Link®