Questo manuale d'istruzione è fornito da trovaprezzi.it. Scopri tutte le offerte per APC EPDU1132B

o cerca il tuo prodotto tra le migliori offerte di Gruppi di Continuità

by Schneider Electric

Easy PDU Basic Rack Power Distribution Unit Installation

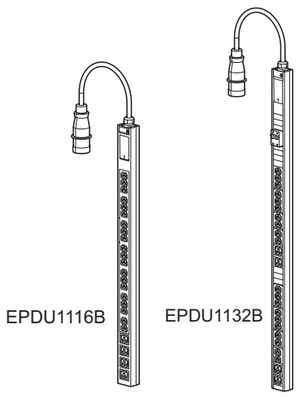

Worldwide Customer Support

Customer support for this product is available at **www.apc.com**

© 2021 APC by Schneider Electric. APC and NetShelter are trademarks owned by Schneider Electric SE. All other trademarks are property of their respective owners.

990-91330A **10/2021**

Overview

This sheet provides installation information for your Easy PDU. Read the instructions carefully.

Receiving

Inspect the package and contents for shipping damage. Make sure all parts were sent. Immediately report any shipping damage to the shipping agent. Report missing contents, product damage, or other problems with the product to APC by Schneider Electric or your APC by Schneider Electric reseller.

Material recycling

The shipping materials are recyclable. Please save them for later use, or dispose of them appropriately.

Safety

Read the following information before installing or operating your APC by Schneider Electric Rack Power Distribution Unit (PDU).

⚠ ⚠ DANGER

HAZARD OF ELECTRIC SHOCK, EXPLOSION, OR ARC FLASH

- The Rack PDU is intended to be installed and operated by a skilled person in a controlled location.
- Do not operate the Rack PDU with the covers removed.
- This Rack PDU is intended for indoor use only.
- Do not install this Rack PDU where excessive moisture or heat is present.
- Never install any wiring, equipment, or Rack PDUs during a lightning storm.
- Plug this Rack PDU into a grounded power outlet only. The power outlet must be connected to appropriate branch circuit/mains protection (fuse or circuit breaker). Connection to any other type of power outlet may result in a shock hazard.
- Do not use extension cords or adapters with this Rack PDU.
- If a socket-outlet is not accessible to the equipment, a socket-outlet shall be installed.
- Do not work alone under hazardous conditions.
- Check that the power cord, plug, and socket are in good condition.
- Disconnect the Rack PDU from the power outlet before you install or connect equipment to reduce the risk of electric shock when you cannot verify grounding. Reconnect the Rack PDU to the power outlet only after you make all connections.
- Do not handle any kind of metallic connector before the power has been removed.
- Use one hand, whenever possible, to connect or disconnect signal cables to avoid a possible shock from touching two surfaces with different grounds.
- This unit does not have any user-serviceable parts. Repairs are to be performed only by factory-trained service personnel.
- High leakage current from attached loads is possible. If total leakage current will exceed 3.5mA, attach a ground wire from the Rack PDU supplementary ground (M5 thread) to a reliable ground in your facility before energizing the Rack PDU.

Failure to follow these instructions will result in death or serious injury.

⚠ WARNING

FIRE HAZARD

- This equipment should be connected to a single-outlet dedicated circuit protected by a circuit breaker or fuse with the same current rating as the Rack PDU.
- The plug or inlet serves as the disconnect for the Rack PDU. Make sure the utility power outlet for the Rack PDU will be close to the Rack PDU and readily accessible.
- Some models of Rack PDUs are provided with IEC C14 or C20 inlets. Use of the proper power cord is the user's responsibility.

Failure to follow these instructions can result in death or serious injury.

Installation

Mount the Rack PDU vertically in an Easy rack or any standard EIA-310 rack.

Option 1 - Vertical Installation with Brackets

1. Install the two (2) brackets to the Rack PDU with the provided screws.

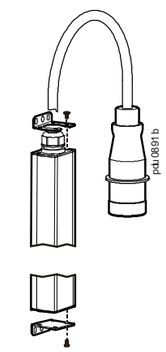

2. Install to the rack with the provided four (4) M5 x10 mm self tapping screws.

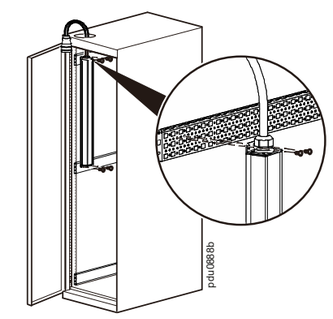

Option 2 - Toolless Mounting

The mounting pegs of the Rack PDU are installed at the factory. Slide both mounting pegs into the holes located in the channel in the rear panel of the rack. Snap the Rack PDU into place by pushing it downward until it locks into position.

NOTE: When installing the Rack PDU, ensure that the power cord plug is accessible and that it is connected to a grounded outlet.

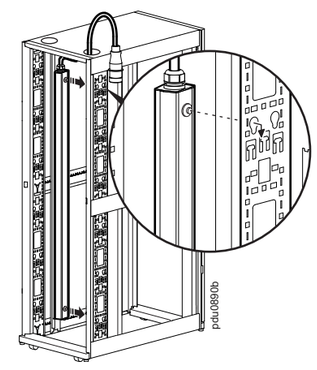

Specifications

	EPDU1116B	EPDU1132B
Electrical		
Nominal Input Voltage	200 - 240 VAC 1 PHASE	
Maximum Input Current (Phase)	16A	32A
Input Frequency	50/60Hz	
Input Connection	IEC-309 16A 2P+E	IEC-309 32A 2P+E
Output Voltage	200 - 240 VAC 1 PHASE	
Output Connections	IEC-320-C13 (20) Max. output current 10A IEC-320-C19 (4) Max. output current 16A	Bank1: IEC-320-C13 (10) Max. output current 10A IEC-320-C19 (2) Max. output current 16A Bank2: IEC-320-C13 (10) Max. output current 10A IEC-320-C19 (2) Max. output current 16A
Circuit Breakers	None	Two (2) 16A 1-pole hydraulic-magnetic circuit breakers
Physical		
Dimensions (H x W x D)	902 x 62 x 44.4 mm (35.5 x 2.44 x 1.74 in)	1175 x 62 x 44.4 mm (46.25 x 2.44 x 1.74 in)
Input power cord length	3 m (9.8 ft)	3 m (9.8 ft)
Shipping dimensions (H x W x D)	1320 x 160 x 110 mm (52.0 x 6.30 x 4.33 in)	1320 x 160 x 110 mm (52.0 x 6.30 x 4.33 in)
Weight/Shipping weight	2.2 kg (4.85 lb)/ 2.98 kg (6.56 lb)	3.58kg (7.89 lb)/ 4.36 kg (9.61 lb)
Environmental		
Maximum elevation (above MSL) Operating/Storage	0–3000 m (0–10,000 ft) / 0–15000 m (0–50,000 ft)	
Temperature: Operating/Storage	–5 to 45°C (23 to 113°F) / –25 to 65°C (–13 to 149°F)	
Humidity: Operating/Storage	5–95% RH, non-condensing	
Compliance		
EMC verification	CE EN55035, EN55032, EN55024	
Safety verification	CE, TUV, EAC, KC, UKCA, EN/IEC62368-1	
CE EU Contact Address	Schneider Electric, 35 rue Joseph Monier 92500 Rueil Malmaison, France	
Environmental	RoHS & Reach	

Life Support Policy

General policy

APC by Schneider Electric does not recommend the use of any of its products in the following situations:

- In life-support applications where failure or malfunction of the APC by Schneider Electric product can be reasonably expected to cause failure of the life-support device or to affect significantly its safety or effectiveness.
- In direct patient care.

APC by Schneider Electric will not knowingly sell its products for use in such applications unless it receives in writing assurances satisfactory to APC by Schneider Electric that (a) the risks of injury or damage have been minimized, (b) the customer assumes all such risks, and (c) the liability of APC by Schneider Electric is adequately protected under the circumstances.

Examples of life-support devices

The term *life-support device* includes but is not limited to neonatal oxygen analyzers, nerve stimulators (whether used for anesthesia, pain relief, or other purposes), autotransfusion devices, blood pumps, defibrillators, arrhythmia detectors and alarms, pacemakers, hemodialysis systems, peritoneal dialysis systems, neonatal ventilator incubators, ventilators (for adults and infants), anesthesia ventilators, infusion pumps, and any other devices designated as “critical” by the U.S. FDA.

Hospital-grade wiring devices and leakage current protection may be ordered as options on many APC by Schneider Electric UPS systems. APC by Schneider Electric does not claim that units with these modifications are certified or listed as hospital-grade APC by Schneider Electric or any other organization. Therefore these units do not meet the requirements for use in direct patient care.

Radio frequency interference

Changes or modifications to this unit not expressly approved by the party responsible for compliance could void the user's authority to operate this equipment.

1 Year Factory Warranty

This warranty applies only to the products you purchase for your use in accordance with this manual.

Terms of warranty

APC by Schneider Electric warrants its products to be free from defects in materials and workmanship for a period of one year from the date of purchase. APC by Schneider Electric will repair or replace defective products covered by this warranty. This warranty does not apply to equipment that has been damaged by accident, negligence or misapplication or has been altered or modified in any way. Repair or replacement of a defective product or part thereof does not extend the original warranty period. Any parts furnished under this warranty may be new or factory-remanufactured.

Non-transferable warranty

This warranty extends only to the original purchaser who must have properly registered the product. The product may be registered at the APC by Schneider Electric website, **www.apc.com**.

Exclusions

APC by Schneider Electric shall not be liable under the warranty if its testing and examination disclose that the alleged defect in the product does not exist or was caused by end user’s or any third person’s misuse, negligence, improper installation or testing. Further, APC by Schneider Electric shall not be liable under the warranty for unauthorized attempts to repair or modify wrong or inadequate electrical voltage or connection, inappropriate on-site operation conditions, corrosive atmosphere, repair, installation, exposure to the elements, Acts of God, fire, theft, or installation contrary to APC by Schneider Electric recommendations or specifications or in any event if the APC by Schneider Electric serial number has been altered, defaced, or removed, or any other cause beyond the range of the intended use.

THERE ARE NO WARRANTIES, EXPRESS OR IMPLIED, BY OPERATION OF LAW OR OTHERWISE, OF PRODUCTS SOLD, SERVICED OR FURNISHED UNDER THIS AGREEMENT OR IN CONNECTION HEREWITH. APC BY SCHNEIDER ELECTRIC DISCLAIMS ALL IMPLIED WARRANTIES OF MERCHANTABILITY, SATISFACTION AND FITNESS FOR A PARTICULAR PURPOSE. APC BY SCHNEIDER ELECTRIC EXPRESS WARRANTIES WILL NOT BE ENLARGED, DIMINISHED, OR AFFECTED BY AND NO OBLIGATION OR LIABILITY WILL ARISE OUT OF, APC BY SCHNEIDER ELECTRIC RENDERING OF TECHNICAL OR OTHER ADVICE OR SERVICE IN CONNECTION WITH THE PRODUCTS. THE FOREGOING WARRANTIES AND REMEDIES ARE EXCLUSIVE AND IN LIEU OF ALL OTHER WARRANTIES AND REMEDIES. THE WARRANTIES SET FORTH ABOVE CONSTITUTE APC BY SCHNEIDER ELECTRIC’S SOLE LIABILITY AND PURCHASER’S EXCLUSIVE REMEDY FOR ANY BREACH OF SUCH WARRANTIES. WARRANTIES EXTEND ONLY TO PURCHASER AND ARE NOT EXTENDED TO ANY THIRD PARTIES.

IN NO EVENT SHALL APC BY SCHNEIDER ELECTRIC, ITS OFFICERS, DIRECTORS, AFFILIATES OR EMPLOYEES BE LIABLE FOR ANY FORM OF INDIRECT, SPECIAL, CONSEQUENTIAL OR PUNITIVE DAMAGES, ARISING OUT OF THE USE, SERVICE OR INSTALLATION, OF THE PRODUCTS, WHETHER SUCH DAMAGES ARISE IN CONTRACT OR TORT, IRRESPECTIVE OF FAULT, NEGLIGENCE OR STRICT LIABILITY OR WHETHER APC BY SCHNEIDER ELECTRIC HAS BEEN ADVISED IN ADVANCE OF THE POSSIBILITY OF SUCH DAMAGES. SPECIFICALLY, APC BY SCHNEIDER ELECTRIC IS NOT LIABLE FOR ANY COSTS, SUCH AS LOST PROFITS OR REVENUE, LOSS OF EQUIPMENT, LOSS OF USE OF EQUIPMENT, LOSS OF SOFTWARE, LOSS OF DATA, COSTS OF SUBSTITUENTS, CLAIMS BY THIRD PARTIES, OR OTHERWISE.

NO SALESMAN, EMPLOYEE OR AGENT OF APC BY SCHNEIDER ELECTRIC IS AUTHORIZED TO ADD TO OR VARY THE TERMS OF THIS WARRANTY. WARRANTY TERMS MAY BE MODIFIED, IF AT ALL, ONLY IN WRITING SIGNED BY AN APC BY SCHNEIDER ELECTRIC OFFICER AND LEGAL DEPARTMENT.

Warranty claims

Customers with warranty claims issues may access the APC by Schneider Electric customer support network through the Support page of the Schneider Electric website, **www.apc.com/support**. Select your country from the country selection pull-down menu at the top of the Web page. Select the Support tab to obtain contact information for customer support in your region.

by Schneider Electric

Basic Rack PDU 机架配电单元安装手册

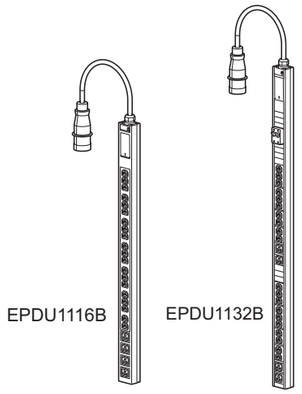

全球客户支持

客户支持和保修信息，请访问：www.apc.com。

© 2021 施耐德电气 版权所有。

990-91330A 10/2021

安全信息

此表提供了 Easy PDU 的安装信息。请仔细阅读说明。

接收

检查包装和内容是否有运输损坏。确保所有部件都已发送。立即向运输代理商报告任何运输损坏。

请通过 apc.com 联系您的 APC by Schneider Electric 经销商或全球客户支持，以报告产品缺失的内容，产品损坏或其他问题。

材料回收

运输材料是可回收的。请妥善保管以备日后使用，或妥善处理。

安全

在安装或操作您的 APC by Schneider Electric Rack 配电单元 （PDU）之前，请阅读以下信息。

⚠ ⚠ 危险

触电、爆炸或电弧闪光的危险

- 如果盖板拆除，请勿操作机架 PDU。
- 内部没有用户可以检修的零件。请安排具有资历的人员进行检修。
- 连接固定和电缆控制附件时，只能使用我们提供的器件。
- 只能在室内的干燥位置使用。
- 安装机架 PDU 时，请遵守当地和国家的所有法规。
- 在无法确认是否接地时，在机架 PDU 连接设备前，请从市电电源插座断开机架 PDU。
- 机架 PDU 适当安装到机架式机柜，且完成了所有负载和信号连接后，在市电电源插座，连接机架 PDU 的电源线。
- 确保市电电源插座和机架 PDU 电源线和插头状况良好。
- 请勿独自作业，亦不得在危险条件下作业。
- 高电流通过导电材料会引起严重烧伤。
- 检修负载设备或电源线前，从该产品断开负载电源线。
- 请务必使用具有合适额定电压的传感设备，确认电源已经关闭。
- 连接的负载可能泄漏出高电流。如果总的泄漏电流将超出 3.5mA，接通机架 PDU 前，将一根接地线从机架 PDU 辅助接地 （M5 螺纹）连接到设施中的可靠接地。

否则，可能导致死亡或严重受伤。

⚠ 警告

起火危险

- 该设备应当连接到单一插座的专用电路，并利用具有与机架 PDU 相同电流等级的断路器或保险丝加以保护。
- 插头或引入线用作机架 PDU 的断路器。确保机架 PDU 的市电电源插座靠近机架 PDU，且容易接近。
- 一些型号的机架 PDU 提供有 IEC C14 或 C20 引入线。用户应负责使用合适的电源线。

否则，可能导致死亡或严重受伤。

安装

把机架 PDU 垂直的安装在 Easy 机架或任何标准的 EIA-310 机架。

方式 1– 垂直支架安装

1. 使用随附的硬件，把两个支架安装到机架 PDU 上。

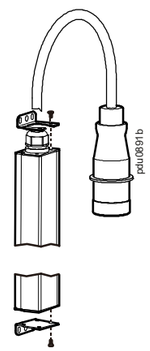

2. 用随附的四个 M5 x10 mm 自攻螺丝，把机架 PDU 固定在机架上。

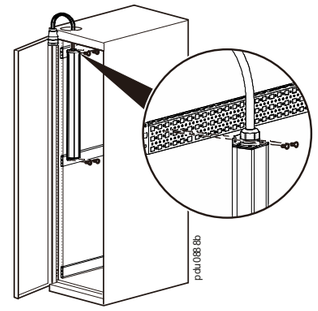

方式 2- 免工具安装

机架 PDU 的安装钉已经在工厂预安装。

把两个固定销滑入机柜背面板通道中的空洞。

向下按压机架 PDU, 将其卡入，直至锁紧。

注意：安装机架 PDU 时，请确保电源线插头易于触及，并且 PDU 连接到一个接地插座。

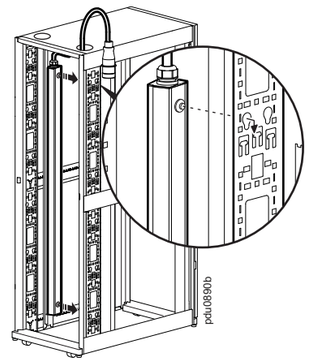

规格参数

	EPDU1116B	EPDU1132B
电气参数		
额定输入电压	200 - 240 VAC 1 PHASE	
最大输入电流	16A	32A
额定输入频率	50/60Hz	
输入接口	IEC-309 16A 2P+E	IEC-309 32A 2P+E
输出电压	200 - 240 VAC 1 PHASE	
输出接口	IEC-320-C13 (20) 最大输出电流 10A IEC-320-C19 (4) 最大输出电流 16A	Bank 1: IEC-320-C13 (10) 最大输出电流 10A IEC-320-C19 (2) 最大输出电流 16A Bank 2: IEC-320-C13 (10) 最大输出电流 10A IEC-320-C19 (2) 最大输出电流 16A
断路器	没有	两 （2）个 16A 1 极液磁断路器
结构参数		
产品尺寸 [高 X 宽 X 深]	902 x 62 x 44.4 mm (35.5 x 2.44 x 1.74 in)	1175 x 62 x 44.4 mm (46.25 x 2.44 x 1.74 in)
电源线的长度	3 m (9.8 ft)	3 m (9.8 ft)
包装尺寸 [高 X 宽 X 深]	1320 x 160 x 110 mm (52.0 x 6.30 x 4.33 in)	1320 x 160 x 110 mm (52.0 x 6.30 x 4.33 in)
产品重量 / 包装重量	2.2 kg (4.85 lb)/ 2.98 kg (6.56 lb)	3.58kg (7.89 lb)/ 4.36 kg (9.61 lb)
适应环境		
海拔高度 （基于平均海平面 ） 工作条件 / 储存条件	0–3000 m (0–10,000 ft) / 0–15000 m (0–50,000 ft)	
温度 : 工作条件 / 储存条件	–5 to 45°C (23 to 113°F) / –25 to 65°C (–13 to 149°F)	
湿度 : 工作条件 / 储存条件	5–95% 相对湿度非凝结	
认证		
电磁兼容标准	遵循标准 EN55035, EN55032, EN55024	
安全标准	CE, TUV, EAC, KC, UKCA, 遵循标准 EN/IEC62368-1	
CE EU Contact Address	Schneider Electric, 35 rue Joseph Monier 92500 Rueil Malmaison, France	
环境	RoHS & Reach	

生命支持政策

一般策略

APC by Schneider Electric 不建议在以下情况下使用其任何产品：

在 APC 产品的故障或失效可能导致生命保障设备的故障，或极大地影响其安全性或效率的生命保障应用中。

直接护理病人。

APC by Schneider Electric 将不会有意地针对此类应用场合销售其产品，除非 APC by Schneider Electric 收到令其满意的书面担保，明确表示：(a) 人身伤害或设备的损坏风险已降至最低，(b) 客户承担所有风险，(c) 如有此类情况发生，APC 的责任将受到充分地保护。

生命保障设备的实例

*生命保障设备*包括但不仅限于：新生儿氧气分析仪、神经模拟器 （用于麻醉、减轻疼痛等）、自体输血设备、抽血、去纤颤器、心率不齐探测器和警报器、起搏器、血液透析系统、腹膜透析系统、新生儿通风保育器、通风设备 （用于成人和婴儿）、麻醉手术通风设备、输血以及由 U.S. FDA 指定为 “ 关键 ” 的其他设备。

对于很多 APC by Schneider Electric UPS 系统，可以作为可选项订购医院级的接线设备和漏电保护设备。APC by Schneider Electric 未声明经过这些更改的设备经过 APC by Schneider Electric 或其他组织验证或被列为医院级的设备。因此这些设备不符合直接护理病人的要求。

射频干扰

未经合规负责方明确批准而对本设备进行更改或修改可能会使用户无权操作此设备。

一年出厂担保

此担保适用于购买后遵照手册进行使用的产品。

担保条款

APC by Schneider Electric 保证其产品自购买之日起一年内不会出现材料和工艺缺陷。APC by Schneider Electric 将对本担保适用的故障产品提供修理或更换服务。本担保不适用于因偶然、疏忽或误用所造成的损坏或以任何方式更改或改装过的产品。

故障产品或部件的修理或更换并不会延长原保修期。根据本担保所提供的任何部件可能是全新的，也可能是工厂 - 翻新品。

不可转让担保

本担保只适用于适当注册过产品的原始购买者。可以通过 APC by Schneider Electric 网站 www.apc.com 注册该产品。

免责条款

若经 APC 测试和检测发现，购买者所声称的缺陷根本不存在或由购买者或任何第三方误用、疏忽、安装或测试不当引起，则 APC by Schneider Electric 不给予保修服务。如属下列情况，APC by Schneider Electric 亦不提供保修服务：未经授权擅自修理或改装、错误或不当电压或连接、现场操作条件不当、腐蚀性环境、修理、安装和打开设备外壳、自然因素、火灾、失窃，或不依照 APC by Schneider Electric 建议或规格安装或更改、损坏、移除 APC by Schneider Electric 序列号的任何情形，或者进行其它超出使用范围的操作。

对于根据本协议及其相关条款销售、维修或提供的产品，APC by Schneider Electric 在法律或相关法规允许的范围内不提供任何明示或暗示的担保。对于本产品用于特殊目的适销性、满意度和适用性，APC by Schneider Electric 不提供任何形式的暗示担保。APC by Schneider Electric 的明示担保不应被扩展、缩减或受到责任义务影响，APC by Schneider Electric 只提供与产品相关的技术或其他建议或服务。上述的担保和补救措施仅适用于本产品并取代所有其他担保和补救措施。针对任何违反担保的情况，上述担保规定了 APC by Schneider Electric 的全部责任以及购买者的全部补偿。APC by Schneider Electric 提供的担保仅授予本产品购买者，任何第三方不得享受本担保。

APC by Schneider Electric 及其官员、主管、子公司或员工不对使用、修理或安装产品过程中发生的任何间接的、特殊结果的或惩罚性的损害负责，不论此类损害是来自于合同或民事侵权，不论是属于故障、疏忽或严格责任，或者 APC by Schneider Electric 是否已预先被告知损害的可能性。特别需要指出的是，APC by Schneider Electric 对任何费用不承担责任，例如损失利润和收入、设备损坏、无法使用设备、软件损坏、丢失数据、替代物的成本、第三方索赔或其它方面的费用。

APC by Schneider Electric 的任何销售人员、雇员或代理商无权对本担保进行任何增补或修改。如有必要，仅可由 APC by Schneider Electric 官员和法律部门以书面形式签署对本担保条款的修改。

担保索赔

发生担保索赔问题的客户可以通过 APC by Schneider Electric 网站 www.apc.com/support 上的 “ 支持 ” 页面访问 APC by Schneider Electric 客户支持网络。

从网页顶部的国家 / 地区选择下拉菜单中选择您的国家 / 地区。选择 “ 支持 ” 选项卡以获得您所在地区的客户支持联系信息。