Questo manuale d'istruzione è fornito da trovaprezzi.it. Scopri tutte le offerte per Asus VG27AQML1A o cerca il tuo prodotto tra le migliori offerte di Monitor

trovaprezzi.it

Questo manuale d'istruzione è fornito da trovaprezzi.it. Scopri tutte le offerte per Asus VG27AQML1A o cerca il tuo prodotto tra le migliori offerte di Monitor

ASUS®

TUF Gaming Monitor VG27AQML1A series

User Guide

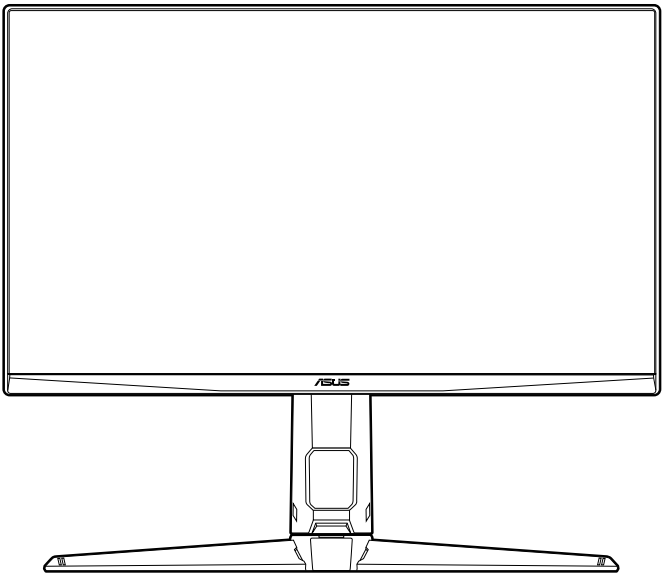

HDMI™
HIGH-DEFINITION MULTIMEDIA INTERFACE

First Edition

April 2023

Copyright © 2023 ASUSTeK COMPUTER INC. All Rights Reserved.

No part of this manual, including the products and software described in it, may be reproduced, transmitted, transcribed, stored in a retrieval system, or translated into any language in any form or by any means, except documentation kept by the purchaser for backup purposes, without the express written permission of ASUSTeK COMPUTER INC. (“ASUS”).

Product warranty or service will not be extended if: (1) the product is repaired, modified or altered, unless such repair, modification of alteration is authorized in writing by ASUS; or (2) the serial number of the product is defaced or missing.

ASUS PROVIDES THIS MANUAL “AS IS” WITHOUT WARRANTY OF ANY KIND, EITHER EXPRESS OR IMPLIED, INCLUDING BUT NOT LIMITED TO THE IMPLIED WARRANTIES OR CONDITIONS OF MERCHANTABILITY OR FITNESS FOR A PARTICULAR PURPOSE. IN NO EVENT SHALL ASUS, ITS DIRECTORS, OFFICERS, EMPLOYEES OR AGENTS BE LIABLE FOR ANY INDIRECT, SPECIAL, INCIDENTAL, OR CONSEQUENTIAL DAMAGES (INCLUDING DAMAGES FOR LOSS OF PROFITS, LOSS OF BUSINESS, LOSS OF USE OR DATA, INTERRUPTION OF BUSINESS AND THE LIKE), EVEN IF ASUS HAS BEEN ADVISED OF THE POSSIBILITY OF SUCH DAMAGES ARISING FROM ANY DEFECT OR ERROR IN THIS MANUAL OR PRODUCT.

SPECIFICATIONS AND INFORMATION CONTAINED IN THIS MANUAL ARE FURNISHED FOR INFORMATIONAL USE ONLY, AND ARE SUBJECT TO CHANGE AT ANY TIME WITHOUT NOTICE, AND SHOULD NOT BE CONSTRUED AS A COMMITMENT BY ASUS. ASUS ASSUMES NO RESPONSIBILITY OR LIABILITY FOR ANY ERRORS OR INACCURACIES THAT MAY APPEAR IN THIS MANUAL, INCLUDING THE PRODUCTS AND SOFTWARE DESCRIBED IN IT.

Products and corporate names appearing in this manual may or may not be registered trademarks or copyrights of their respective companies, and are used only for identification or explanation and to the owners’ benefit, without intent to infringe.

Contents

Notices iv
Safety information v
Care & Cleaning vi
Takeback Services vii
Product information for EU energy label vii

Chapter 1: Product introduction

1.1 Welcome! 1-1
1.2 Package contents 1-1
1.3 Monitor introduction 1-2
1.3.1 Front view 1-2
1.3.2 Back view 1-3

Chapter 2: Setup

2.1 Assembling the monitor arm/base 2-1
2.2 Adjusting the monitor 2-2
2.3 Detaching the arm (for VESA wall mount) 2-3
2.4 Cable management 2-4
2.5 Connecting the cables 2-4
2.6 Turning on the monitor 2-5

Chapter 3: General instructions

3.1 OSD (On-Screen Display) menu 3-1
3.1.1 How to reconfigure 3-1
3.1.2 OSD function introduction 3-2
3.2 Specifications summary 3-9
3.3 Outline dimensions 3-11
3.4 Troubleshooting (FAQ) 3-12
3.5 Supported operating mode 3-13

Notices

Federal Communications Commission Statement

This device complies with Part 15 of the FCC Rules. Operation is subject to the following two conditions:

- This device may not cause harmful interference, and
- This device must accept any interference received including interference that may cause undesired operation.

This equipment has been tested and found to comply with the limits for a Class B digital device, pursuant to Part 15 of the FCC Rules. These limits are designed to provide reasonable protection against harmful interference in a residential installation. This equipment generates, uses and can radiate radio frequency energy and, if not installed and used in accordance with the instructions, may cause harmful interference to radio communications. However, there is no guarantee that interference will not occur in a particular installation. If this equipment does cause harmful interference to radio or television reception, which can be determined by turning the equipment off and on, the user is encouraged to try to correct the interference by one or more of the following measures:

- Reorient or relocate the receiving antenna.
- Increase the separation between the equipment and receiver.
- Connect the equipment into an outlet on a circuit different from that to which the receiver is connected.
- Consult the dealer or an experienced radio/TV technician for help.

The use of shielded cables for connection of the monitor to the graphics card is required to assure compliance with FCC regulations. Changes or modifications to this unit not expressly approved by the party responsible for compliance could void the user's authority to operate this equipment.

ENERGY STAR complied product

ENERGY STAR is a joint program of the U.S. Environmental Protection Agency and the U.S. Department of Energy helping us all save money and protect the environment through energy efficient products and practices.

All ASUS products with the ENERGY STAR logo comply with the ENERGY STAR standard, and the power management feature is enabled by default. The monitor and computer are automatically set to sleep after 10 and 30 minutes of user inactivity. To wake your computer, click the mouse or press any key on the keyboard. Please visit http://www.energystar.gov/powermanagement for detail information on power management and its benefits to the environment. In addition, please visit http://www.energystar.gov for detail information on the ENERGY STAR joint program.

NOTE: Energy Star is NOT supported on FreeDOS and Linux-based operating system.

Canadian Department of Communications Statement

This digital apparatus does not exceed the Class B limits for radio noise emissions from digital apparatus set out in the Radio Interference Regulations of the Canadian Department of Communications.

This class B digital apparatus complies with Canadian ICES-003.

This Class B digital apparatus meets all requirements of the Canadian Interference - Causing Equipment Regulations.

Cet appareil numérique de la classe B respecte toutes les exigences du Réglement sur le matériel brouiller du Canada.

Safety information

- Before setting up the monitor, carefully read all the documentation that came with the package.
- To prevent fire or shock hazard, never expose the monitor to rain or moisture.
- Never try to open the monitor cabinet. The dangerous high voltages inside the monitor may result in serious physical injury.
- If the power supply is broken, do not try to fix it by yourself. Contact a qualified service technician or your retailer.
- Before using the product, make sure all cables are correctly connected and the power cables are not damaged. If you detect any damage, contact your dealer immediately.
- Slots and openings on the back or top of the cabinet are provided for ventilation. Do not block these slots. Never place this product near or over a radiator or heat source unless proper ventilation is provided.
- The monitor should be operated only from the type of power source indicated on the label. If you are not sure of the type of power supply to your home, consult your dealer or local power company.
- Use the appropriate power plug which complies with your local power standard.
- Do not overload power strips and extention cords. Overloading can result in fire or electric shock.
- Avoid dust, humidity, and temperature extremes. Do not place the monitor in any area where it may become wet. Place the monitor on a stable surface.
- Unplug the unit during a lightning storm or if it will not be used for a long period of time. This will protect the monitor from damage due to power surges.
- Never push objects or spill liquid of any kind into the slots on the monitor cabinet.
- To ensure satisfactory operation, use the monitor only with UL listed computers which have appropriate configured receptacles marked between 100-240V AC.
- If you encounter technical problems with the monitor, contact a qualified service technician or your retailer.
- Adjustment of the volume control as well as the equalizer to other settings than the center position may increase the ear-/headphones output voltage and therefore the sound pressure level.
- Ensure to connect the power cord to a socket-outlet with earthing connection.
- The supplied power adapter and/or power cable are designed to use with the product only. Do not use with other products.

This symbol of the crossed out wheeled bin indicates that the product (electrical, electronic equipment, and mercury-containing button cell battery) should not be placed in municipal waste. Please check local regulations for disposal of electronic products.

AEEE yönetmeliğine uygundur

Care & Cleaning

- Before you lift or reposition your monitor, it is better to disconnect the cables and power cord. Follow the correct lifting techniques when positioning the monitor. When lifting or carrying the monitor, grasp the edges of the monitor. Do not lift the display by the stand or the cord.
- Cleaning. Turn your monitor off and unplug the power cord. Clean the monitor surface with a lint-free, non-abrasive cloth. Stubborn stains may be removed with a cloth dampened with mild cleaner.
- Avoid using a cleaner containing alcohol or acetone. Use a cleaner intended for use with the monitor. Never spray cleaner directly on the screen, as it may drip inside the monitor and cause an electric shock.

The following symptoms are normal with the monitor:

- The screen may flicker during the initial use due to the nature of the fluorescent light. Turn off the Power Switch and turn it on again to make sure that the flicker disappears.
- You may find slightly uneven brightness on the screen depending on the desktop pattern you use.
- When the same image is displayed for hours, an afterimage of the previous screen may remain after switching the image. The screen will recover slowly or you can turn off the Power Switch for hours.
- When the screen becomes black or flashes, or cannot work anymore, contact your dealer or service center to fix it. Do not repair the screen by yourself!

Conventions used in this guide

WARNING: Information to prevent injury to yourself when trying to complete a task.

CAUTION: Information to prevent damage to the components when trying to complete a task.

IMPORTANT: Information that you MUST follow to complete a task.

NOTE: Tips and additional information to aid in completing a task.

Where to find more information

Refer to the following sources for additional information and for product and software updates.

1. **ASUS websites**
   The ASUS websites worldwide provide updated information on ASUS hardware and software products. Refer to http://www.asus.com

2. **Optional documentation**
   Your product package may include optional documentation that may have been added by your dealer. These documents are not part of the standard package.

3. **About Flicker**
   https://www.asus.com/Microsite/display/eye_care_technology/

Takeback Services

ASUS recycling and takeback programs come from our commitment to the highest standards for protecting our environment. We believe in providing solutions for our customers to be able to responsibly recycle our products, batteries and other components as well as the packaging materials.

Please go to http://csr.asus.com/english/Takeback.htm for detail recycling information in different region.

Product information for EU energy label

VG27AQML1A

1.1 Welcome!

Thank you for purchasing the ASUS® LCD monitor!

The latest widescreen LCD monitor from ASUS provides a broader, brighter and crystal-clear display, plus a host of features that enhance your viewing experience.

With these features, you can enjoy the convenience and delightful visual experience that the monitor brings to you!

1.2 Package contents

Check your package for the following items:

- ✓ LCD monitor
- ✓ Monitor base
- ✓ Quick start guide
- ✓ Warranty card
- ✓ Power cord
- ✓ DisplayPort cable (optional)
- ✓ HDMI cable (optional)
- ✓ USB cable (optional)
- ✓ L-shaped screwdriver (optional)
- ✓ 4 screws (optional)
- ✓ 4 rubbers (optional)

If any of the above items is damaged or missing, contact your retailer immediately.

If you need to replace the power cord or the connection cable(s), please contact ASUS customer service.

1.3 Monitor introduction

1.3.1 Front view

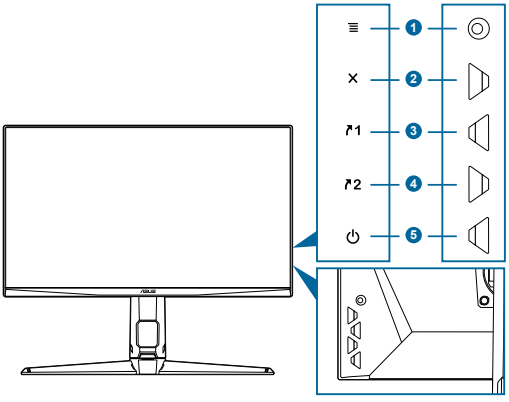

1. ☰ (◎ 5-way) button:
   - Turns on the OSD menu. Enacts the selected OSD menu item.
   - Increases/Decreases values or moves your selection up/down/left/right.
   - Displays the input selection menu when the monitor enters standby mode or displays the “NO SIGNAL“ message.
2. ✕ button
   - Exits the OSD menu item.
   - Displays the input selection menu when the monitor enters standby mode or displays the “NO SIGNAL“ message.
   - Toggles the Key Lock function between on and off with a long press for 5 seconds.
3. ↗1 Shortcut 1 button:
   - Default: GamePlus.
   - To change the shortcut function, go to the MyFavorite > Shortcut > Shortcut 1 menu.
   - Displays the input selection menu when the monitor enters standby mode or displays the “NO SIGNAL“ message.
4. ↗2 Shortcut 2 button:
   - Default: GameVisual.
   - To change the shortcut function, go to the MyFavorite > Shortcut > Shortcut 2 menu.

- Displays the input selection menu when the monitor enters standby mode or displays the “NO SIGNAL“ message.

5. ⏻ Power button/power indicator
   - Turns the monitor on/off.
   - The color definition of the power indicator is as the below table.

Status	Description
White	ON
Amber	Standby mode/No signal
OFF	OFF

1.3.2 Back view

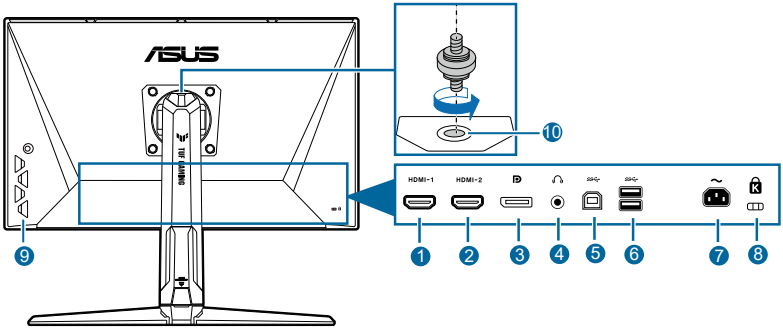

1. **HDMI-1 port**. This port is for connection with an HDMI compatible device.
2. **HDMI-2 port.** This port is for connection with an HDMI compatible device.
3. **DisplayPort.** This port is for connection for a DisplayPort compatible device.
4. **Earphone jack.** This port is only available when an HDMI/DisplayPort cable is connected.
5. **USB 3.2 Gen 1 Type-B**. This port is for connection with a USB upstream cable. The connection enables the USB ports on the monitor.
6. **USB 3.2 Gen 1 Type-A**. These ports are for connection with USB devices, such as USB keyboard/mouse, USB flash drive, etc.
7. **AC-IN port.** This port connects the power cord.
8. **Kensington lock slot**.
9. **Control buttons.**
10. **Tripod screw hole.**

2.1 Assembling the monitor arm/base

To assemble the monitor base:

1. Have the front of the monitor face down on a table.
2. Place the arm hinge of the stand assembly onto its compartment on the rear of the monitor (for selected models).
3. Attach the base into the arm, making sure the tab on the arm fits into the groove on the base.
4. Fix the base to the arm by fastening the bundled screw(s).

We recommend that you cover the table surface with soft cloth to prevent damage to the monitor.

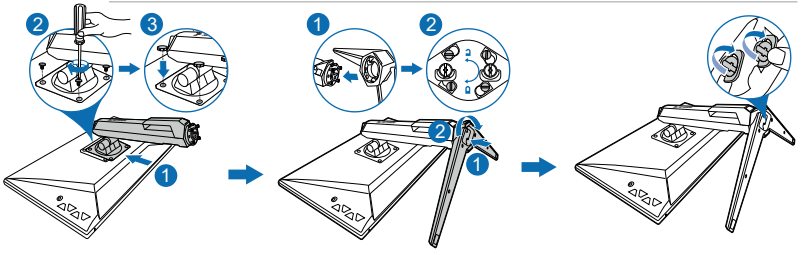

Hinge screw size: M4 x 10 mm.

Base screw size: M6 x 16.2 mm.

2.2 Adjusting the monitor

- For optimal viewing, we recommend that you look at the full face of the monitor, then adjust the monitor to the angle that is most comfortable for you.
- Hold the stand to prevent the monitor from falling when you change its angle.
- The recommended adjusting angle is +20˚ to -5˚ (for tilt)/+20˚ to -20˚ (for swiveling)/ ±130 mm (for height adjustment)/90˚ (for portrait view).

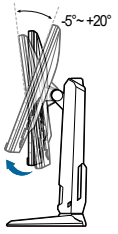

(Tilt)

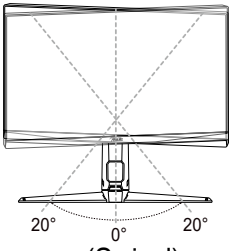

(Swivel)

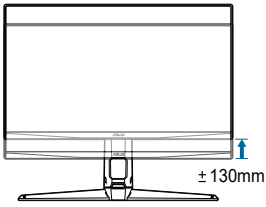

(Height adjustment)

It is normal that the monitor slightly shakes while you adjust the viewing angle.

Pivoting the monitor

1. Lift the monitor to the highest position.
2. Tilt the monitor to its maximum angle.
3. Pivot the monitor to the angle you need.

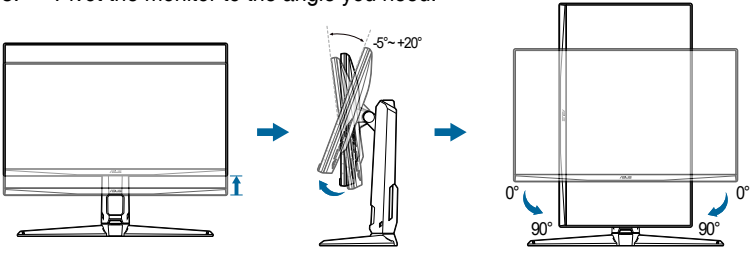

It is normal that the monitor slightly shakes while you adjust the viewing angle.

2.3 Detaching the arm (for VESA wall mount)

The detachable arm/base of this monitor is specially designed for VESA wall mount.

To detach the arm/base:

1. Have the front of the monitor face down on a table.
2. Remove the rubbers in the four screw holes. (Figure 1)
3. Remove the base (Figure 2).
4. Use a screwdriver to remove the screw on the hinge (Figure 3), then remove the hinge.

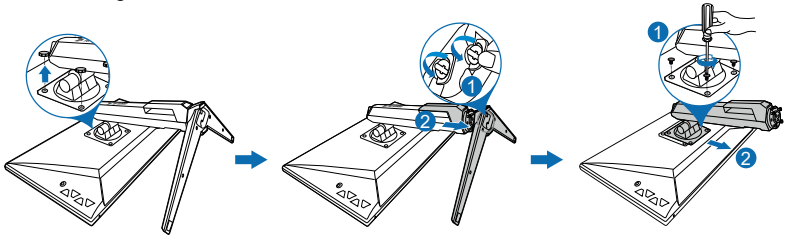

(Figure 1) (Figure 2) (Figure 3)

We recommend that you cover the table surface with soft cloth to prevent damage to the monitor.

- The VESA wall mount kit (100 x 100 mm) is purchased separately.
- Use only the UL Listed Wall Mount Bracket with minimum weight/load 22.7kg (Screw size: M4 x 10 mm)

2.4 Cable management

You can organize the cables using the cable managment slot. Remove the cover before putting the cables through the slot and attach the cover back on.

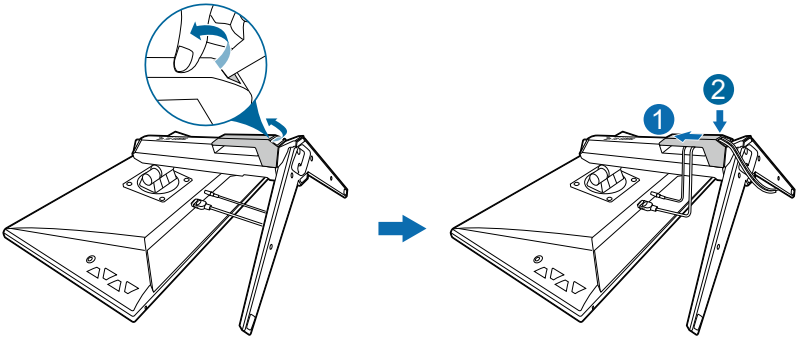

2.5 Connecting the cables

Connect the cables as the following instructions:

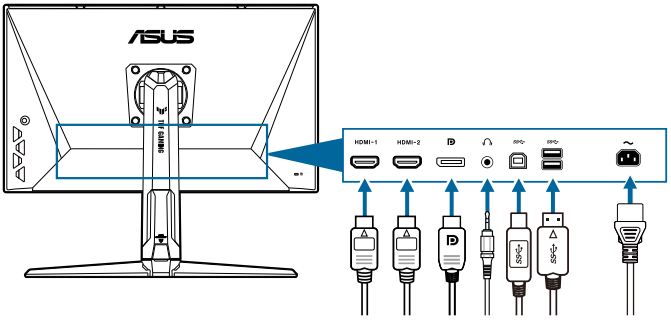

- **To connect the power cord**: Connect one end of the power cord securely to the monitor's AC input port, the other end to a power outlet.
- **To connect the DisplayPort/HDMI cable**:
  a. Plug one end of the DisplayPort/HDMI cable to the monitor's DisplayPort/HDMI port.
  b. Connect the other end of the DisplayPort/HDMI cable to your computer's DisplayPort/HDMI port.
- **To use the earphone:** connect the end with plug type to the monitor's earphone jack when an HDMI or DisplayPort signal is fed.

- **To use the USB 3.2 Gen 1 ports**: Take the supplied USB cable, and plug the smaller end (type B) of the USB upstream cable to the monitor's USB upstream port, and the larger end (type A) to your computer's USB port. Make sure your computer is installed with the lastest Windows 10/Windows 11 operating system. That will enable the USB ports on the monitor to work.

When these cables are connected, you can choose the desired signal from the Input Select item in the OSD menu.

If you need to replace the power cord or the connection cable(s), please contact ASUS customer service.

2.6 Turning on the monitor

Press the power button ⏻ . See page 1-2 for the location of the power button. The power indicator ⏻ lights up in white to show that the monitor is ON.

3.1 OSD (On-Screen Display) menu

3.1.1 How to reconfigure

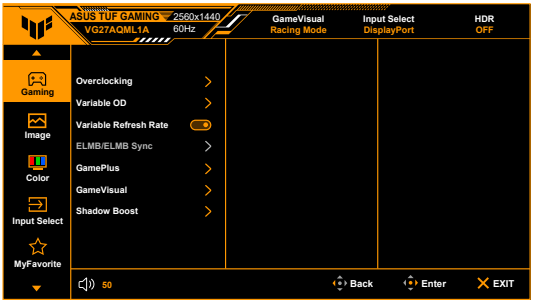

1. Press the ☰ (◎) button to activate the OSD menu.
2. Move the ☰ (◎) button up/down to navigate through the functions. Highlight the desired function and press the ☰ (◎) button to activate it. If the function selected has a sub-menu, move the ☰ (◎) button up/down again to navigate through the sub-menu functions. Highlight the desired sub-menu function and press the ☰ (◎) button or move the ☰ (◎) button right to activate it.
3. Move the ☰ (◎) button up/down to change the settings of the selected function.
4. To exit and save the OSD menu, press the ✕ button or move the ☰ (◎) left repeatedly until the OSD menu disappears. To adjust other functions, repeat steps 1-3.

3.1.2 OSD function introduction

1. Gaming

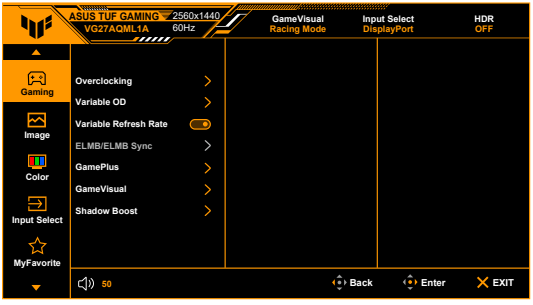

- **Overclocking**:
  - * **ON**: This function allows you to adjust the refresh rate.
  - * **Max Refresh Rate**: Allows you to select a maximum refresh rate of 260Hz (Only for DisplayPort input). After selecting, press the ☰ (◎) button to activate the setting.

Overclocking may cause screen flickering. To reduce such effects, disconnect the DisplayPort cable and use the monitor OSD menu to try again with a safer Max. Refresh rate.

- **Variable OD**: Improves the gray level response time of the LCD panel. The adjusting range is from Level 0 to Level 5.

This function is not available when **ELMB** is enabled.

- **Variable Refresh Rate:** Allows a Variable Refresh Rate supported* graphics source to dynamically adjust display refresh rate based on typical content frame rates for power efficient, virtually stutter free and low-latency display update.

  - **Variable Refresh Rate** can only be activated within 48Hz~144Hz for HDMI and 48Hz~240Hz for DisplayPort.
  - For supported GPUs, minimum PC system and driver requirements, please contact the GPU manufactures.

- **ELMB/ELMB Sync**:

* **ELMB** can only be activated when **Variable Refresh Rate** is **Off** and the refresh rate is 120Hz, 144Hz, 155Hz, 160Hz, 165Hz, 240Hz or 260Hz. This function eliminates screen tearing, reduces ghosting and motion blur when playing games. The function includes 3-level clarity and position adjustment.

To activate **ELMB**, turn off **Variable Refresh Rate** function first.

* **ELMB Sync**: Allows you to turn on the function when **Variable Refresh Rate** is On. This function eliminates screen tearing, reduces ghosting and motion blur when playing games.

- **GamePlus**: The GamePlus function provides a toolkit and creates a better gaming environment for users when playing different types of games.
  * **FPS Counter**: The FPS (frames per second) counter lets you know how smooth the game is running.
  * **Crosshair**: The crosshair overlays with 6 different crosshair options letting you choose the one that best suits the game you're playing.
  * **Timer**: You can position the timer on the upper left corner of the display so you can keep track of the gaming time.
  * **Stopwatch**: You can position the stopwatch on the upper left corner of the display so you can keep track of the gaming time.
  * **Display Alignment**: Display Alignment displays alignment lines on 4 sides of the screen, serving as an easy and handy tool for you to line up multiple monitors perfectly.
- **GameVisual**: The GameVisual function helps you select among different picture modes in a convenient way.
  * **Scenery Mode**: This is the best choice for scenery photo displaying with GameVisual™ Video intelligence Technology.
  * **Racing Mode**: This is the best choice for racing game playing with GameVisual™ Video intelligence Technology.
  * **Cinema Mode**: This is the best choice for movie watching with GameVisual™ Video intelligence Technology.
  * **RTS/RPG Mode**: This is the best choice for Real-Time Strategy (RTS)/Role-Playing Game (RPG) playing with GameVisual™ Video intelligence Technology.
  * **FPS Mode**: This is the best choice for First Person Shooter game playing with GameVisual™ Video intelligence Technology.
  * **sRGB Mode**: This is the best choice for viewing photos and graphics from PCs.

* **MOBA Mode**: This is the best choice for multiplayer online battle arena game playing with GameVisual™ Video intelligence Technology.
* **Night View**: Best choice for dark-scene games or movies with GameVisual™ Video intelligence Technology.

- In the Racing Mode, the following function(s) are not user-configurable: Saturation, Skin Tone, ASCR.
- In the sRGB Mode, the following function(s) are not user-configurable: Brightness, Contrast, Saturation, Color Temp., Skin Tone, ASCR.
- In the MOBA Mode, the following function(s) are not user-configurable: Saturation, Skin Tone, ASCR.

- **Shadow Boost**: Dark color enhancement adjusts monitor gamma curve to enrich the dark tones in an image, making dark scenes and objects much easier to be seen.

This function is only available in Racing mode, RTS/RPG mode, FPS mode, or sRGB mode.

2. Image

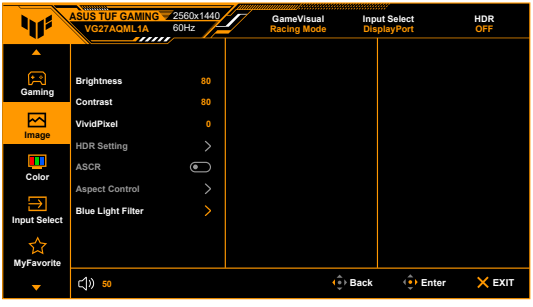

- **Brightness**: The adjusting range is from 0 to 100.

This function is not available when **ELMB** is enabled.

- **Contrast**: The adjusting range is from 0 to 100.
- **VividPixel:** Enhances the outline of the displayed picture and generates high-quality images on screen.
- **HDR Setting**: Contains two HDR modes.
  * **ASUS Gaming HDR:** Is the HDR mode that ASUS has specially adjusted for HDR performance.
  * **ASUS Cinema HDR:** Complies with VESA Display HDR.

* **Brightness Adjustable:** The HDR brightness can be adjusted when the **Brightness Adjustable** function is enabled.

When detecting HDR content, an “HDR ON” message will pop up. When displaying HDR content, the following function(s) are not available: ELMB, GameVisual, Shadow Boost, Brightness, Contrast, ASCR, Aspect Control, Blue Light Filter, Color Temp., Saturation.

- **ASCR**: Turns on/off the ASCR (ASUS Smart Contrast Ratio) function.

This function is only available under **Scenery Mode**, **Cinema Mode**, **RTS/RPG Mode** or **FPS Mode**.

- **Aspect Control**: Adjusts the aspect ratio to **Full**, **Equivalent**, **4:3**, **1:1**, or **16:9 (25"W)**.

This function is not available when **Variable Refresh Rate** or **HDR** is enabled.

- **Blue Light Filter**
  * **OFF:** No change.
  * **Level 1~4:** The higher the level, the less blue light is scattered. When Blue Light Filter is activated,the default settings of Racing Mode will be automatically imported. Between Level 1 to Level 3, the Brightness function is user-configurable. Level 4 is optimized setting. It is in compliance with TUV Low Blue Light Certification. The Brightness function is not user-configurable.

Please refer to the following to alleviate eye strains:

- Users should take some time away from the display if working for long hours. It is advised to take short breaks (at least 5 mins) after around 1 hour of continuous working at the computer. Taking short and frequent breaks is more effective than a single longer break.
- To minimize eye strain and dryness in your eyes, users should rest the eye periodically by focusing on objects that are far away.
- Eye exercises can help to reduces eye strain. Repeat these exercises often. If eye strain continues please consult a physician. Eye exercises: (1) Repeating look up and down (2) Slowly roll your eyes (3) Move your eyes diagonal.
- High energy blue light may lead to eye strain and AMD (Age-Related Macular Degeneration). Blue light Filter to reduce 70% (max.) harmful blue light to avoiding CVS (Computer Vision Syndrome).

3. Color

Set a desired color setting from this menu.

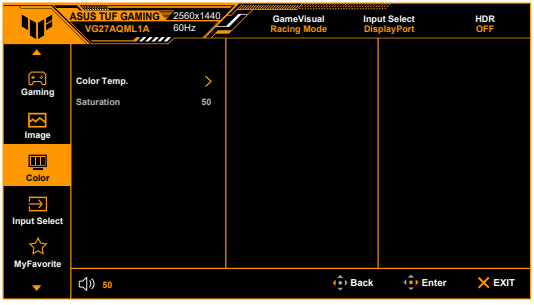

- **Color Temp.**: Contains 4 modes including **Cool**, **Normal**, **Warm**, and **User Mode**.
- **Saturation**: the adjusting range is from 0 to 100.

4. Input Select

In this function, you can select your desired input source or decide if you want the monitor to automatically searches for input sources.

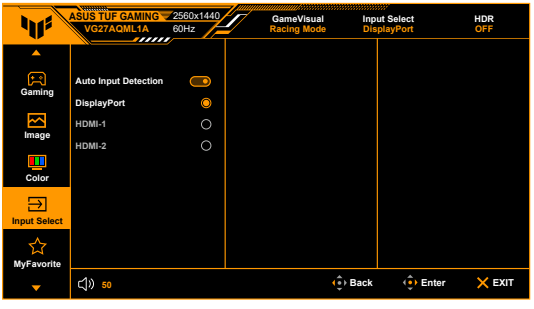

5. MyFavorite

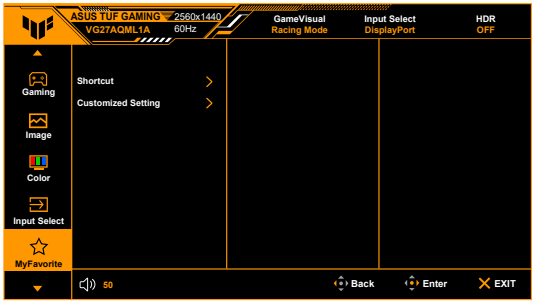

- **Shortcut**:
  - * **Shortcut 1**/**Shortcut 2**: Sets the shortcut functions for shortcut buttons.

When a certain function is selected or activated, your shortcut button may not support. Available function choices for shortcut: GamePlus, GameVisual, Variable OD, Brightness, Mute, Shadow Boost, Contrast, Input Select, HDR Setting, Blue Light Filter, Color Temp., Volume, Customized Setting-1, Customized Setting-2.

- **Customized Setting**: Loads/Saves all settings on the monitor.

6. System Setup

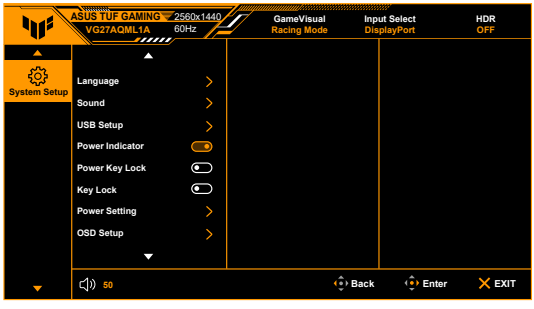

- **Language**: There are 22 languages for your selection, including English, French, German, Italian, Spanish, Dutch, Portuguese, Russian, Czech, Croatian, Polish, Romanian, Hungarian, Turkish, Simplified Chinese, Traditional Chinese, Japanese, Korean, Thai, Indonesian, Persian, Ukrainian.
- **Sound**: Sets the sound related settings from this menu.
  - * **Volume**: The adjusting range is from 0 to 100.
  - * **Mute**: Toggles the monitor sound between on and off.

- **USB setup**: Turns On/Off the **USB Hub** function during standby mode.
- **Power Indicator**: Turn the power LED indicator on/off.
- **Power Key Lock**: Enables or disables the power key.
- **Key Lock**: To disable all function keys. Press ✕ over 5 seconds to cancel the key lock function.
- **Power Setting:**
  - * **Standard Mode**: Standard mode setting may result in higher power consumption.
  - * **Power Saving Mode**: Power saving mode may cause limited luminance performance.

Certain functions that consumes power will be disabled when **Power Saving Mode** is selected. If you wish to enable the functions, choose **Standard Mode**.

Please turn off HDR function before activating the **Power Saving Mode**.

- **OSD Setup**:
  - * Adjusts the horizontal position (H-Position)/the vertical position (V-Position) of the OSD.
  - * Adjusts the OSD timeout from 10 to 120 seconds.
  - * Adjusts the OSD background from opaque to transparent.
  - * Enables or disables the DDC/CI function.
- **DisplayPort Stream**: Compatibility with graphic card. Select **DisplayPort 1.2** or **DisplayPort 1.4** by graphic card DP version.
- **Information**: Shows the monitor information.
- **All Reset**: “Yes” allows you to restore the default settings.

3.2 Specifications summary

Panel Type	TFT LCD
Panel size	27"W (16:9, 68.5 cm) wide screen
Max. Resolution	2560 x 1440
Pixel pitch	0.2331 mm x 0.2331 mm
Brightness (Typ.)	400 cd/m^2
Contrast Ratio (Typ.)	1000:1
Contrast Ratio (Max.)	100,000,000:1 (with ASCR on)
Viewing angle(H/V) CR>10	178˚/178˚
Display colors	1.07G
Response time	1 ms (Gray to gray)
Color temperature selection	4 color temperatures
Analog input	No
Digital input	HDMI v2.0 x 2, DisplayPort v1.4 x 1
Earphone jack	Yes
Audio input	No
Speaker (Built-in)	2 W x 2 Stereo, RMS
USB 3.2 Gen 1 port	1 x USB 3.2 Gen 1 Type-B (upstream) 2 x USB 3.2 Gen 1 Type-A (downstream)
Colors	Black
Power LED	White (On)/Amber (Standby)
Tilt	+20˚~ -5˚
Pivot	+90˚~ -90˚
Swivel	+20˚~ -20˚
Height adjustment	130 mm
VESA wall mount	100 x 100 mm
Kensington lock	Yes
Voltage rating	AC: 100~240V
Power consumption	Power On: < 26 W**, Standby: < 0.5 W, Power Off: < 0.3 W
Temperature (Operating)	0˚C~40˚C
Temperature (Non-operating)	-20˚C~+60˚C
Dimensions (W x H x D) without stand	614.9 x 366.5 x 54 mm
Dimensions (W x H x D) with stand	614.9 x 533.9 x 213.8 mm (highest) 614.9 x 403.9 x 213.8 mm (lowest) 815 x 170 x 477 mm (package)
Weight (Esti.)	6.4 kg (Net); 4.1 kg (without stand); 8.8 kg (Gross)

Multi-languages	22 languages (English, French, German, Italian, Spanish, Dutch, Portuguese, Russian, Czech, Croatian, Polish, Romanian, Hungarian, Turkish, Simplified Chinese, Traditional Chinese, Japanese, Korean, Thai, Indonesian, Persian, Ukrainian)
Accessories	Quick start guide, warranty card, power cord, DisplayPort cable (optional), HDMI cable (optional), USB cable (optional), L-shaped screwdriver (optional), 4 screws (optional), 4 rubbers (optional)
Compliance and Standards	cTUVus, FCC, CB, CE, ErP, WEEE, EU Energy label, UkrSEPRO, ICES-3, CCC, China Energy Label, BSMI, RCM, MEPS, VCCI, PC Recycle, J-MOSS, SDoC, KCC, KC, e-Standby, RoHs (RoHS, China RoHS, J-Moss), CEC, HDMI, DP, Windows 10/11 WHQL, Low Blue Light, Flicker Free, VESA HDR400, PSB, Vietnam Energy Efficiency, Energy Star®

***Specifications are subject to change without notice.**

****Measuring a screen brightness of 200 nits without audio/ USB/ Card reader connection.**

3.3 Outline dimensions

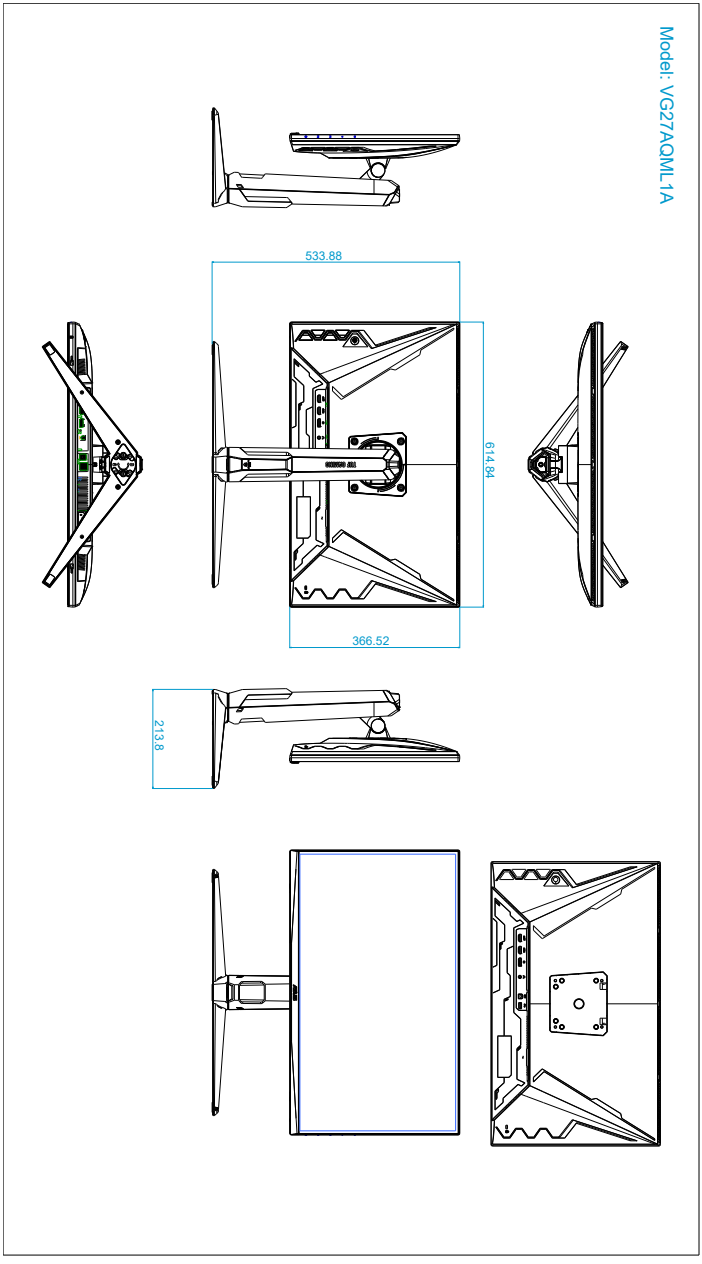

3.4 Troubleshooting (FAQ)

Problem	Possible Solution
Power LED is not ON	• Press the ⏻ button to check if the monitor is in the ON mode. • Check if the power cord is properly connected to the monitor and the power outlet.
The power LED lights amber and there is no screen image	• Check if the monitor and the computer are in the ON mode. • Make sure the signal cable is properly connected the monitor and the computer. • Inspect the signal cable and make sure none of the pins are bent. • Connect the computer with another available monitor to check if the computer is properly working.
Screen image is too light or dark	• Adjust the Contrast and Brightness settings via OSD.
Screen image bounces or a wave pattern is present in the image	• Make sure the signal cable is properly connected to the monitor and the computer. • Move electrical devices that may cause electrical interference.
Screen image has color defects (white does not look white)	• Inspect the signal cable and make sure that none of the pins are bent. • Perform All Reset via OSD. • Adjust the R/G/B color settings or select the Color Temperature via OSD.

3.5 Supported operating mode

Resolution frequency	HDMI Refresh rate	DP Refresh rate
640 x 480	60Hz	60Hz
640 x 480	67Hz	67Hz
640 x 480	72Hz	72Hz
640 x 480	75Hz	75Hz
720 x 400	70Hz	70Hz
800 x 600	56Hz	56Hz
800 x 600	60Hz	60Hz
800 x 600	72Hz	72Hz
800 x 600	75Hz	75Hz
832 x 624	75Hz	75Hz
1024 x 768	60Hz	60Hz
1024 x 768	70Hz	70Hz
1024 x 768	75Hz	75Hz
1152 x 864	75Hz	75Hz
1280 x 1024	60Hz	60Hz
1280 x 1024	75Hz	75Hz
1440 x 900	60Hz	60Hz
1920 x 1080	60Hz	60Hz
1920 x 1080	100Hz	100Hz
1920 x 1080	120Hz	120Hz
2560 x 1440	60Hz	60Hz
2560 x 1440	100Hz	100Hz
2560 x 1440	120Hz	120Hz
2560 x 1440	144Hz	144Hz
2560 x 1440	Not supported	240Hz
2560 x 1440	Not supported	250Hz
2560 x 1440	Not supported	260Hz

When the monitor is operating in the video mode (ie, not displaying data), the following high definition modes shall be supported in addition to standard definition video.

Video Timing

Resolution frequency	HDMI	DP
	Refresh rate	Refresh rate
720 x 480P	59.94Hz	Not supported
720 x 480P	60Hz	Not supported
1280 x 720P	59.94Hz	59.94Hz
1280 x 720P	60Hz	60Hz
1440 x 480P	Not supported	59.94Hz
1440 x 480P	60Hz	60Hz
1920 x 1080P	59.94Hz	59.94Hz
1920 x 1080P	60Hz	60Hz
1920 x 1080P	120Hz	120Hz
3840 x 2160p	60Hz	Not supported