Questo manuale d'istruzione è fornito da trovaprezzi.it. Scopri tutte le offerte per Cougar DarkBlader-G o cerca il tuo prodotto tra le migliori offerte di Case e Alimentatori

Questo manuale d'istruzione è fornito da trovaprezzi.it. Scopri tutte le offerte per Cougar DarkBlader-G o cerca il tuo prodotto tra le migliori offerte di Case e Alimentatori

DARK BLADER G

Assembly Drawing

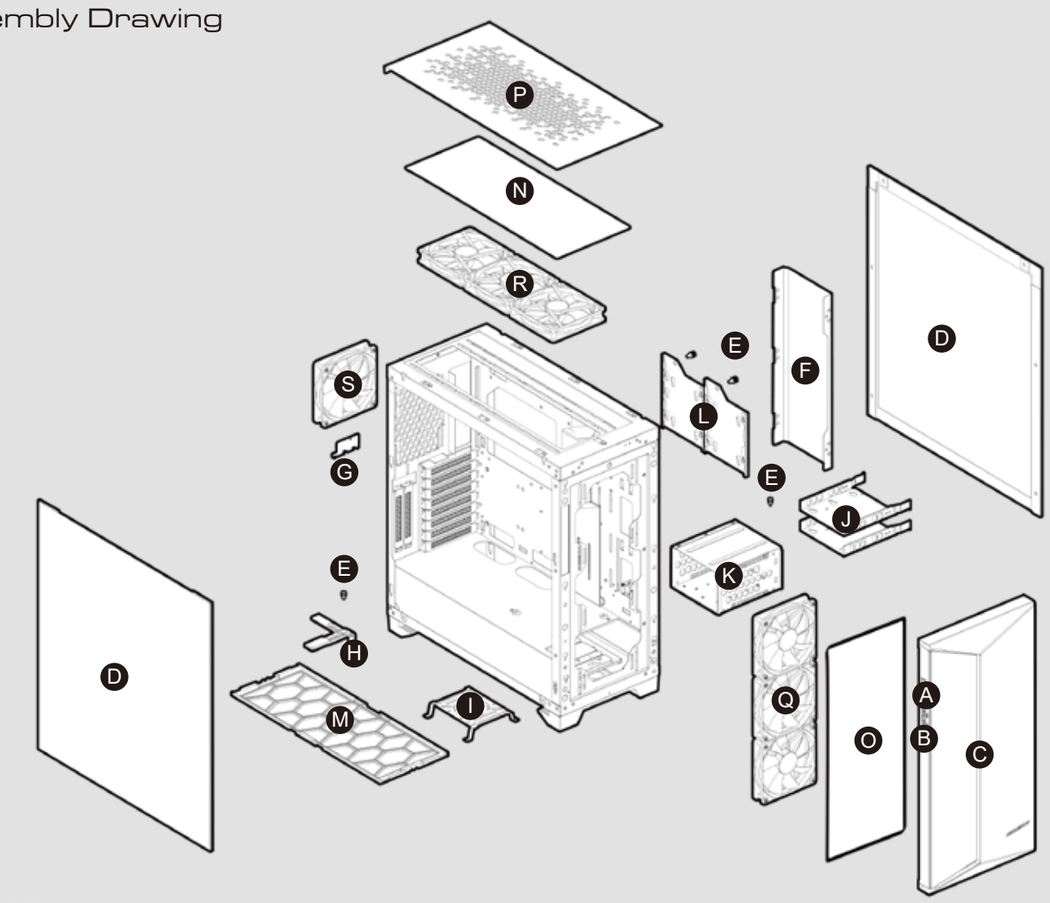

- A Power button / RGB SW button
- B USB 3.0 / HD audio ports
- C Front panel
- D Tempered glass side panels
- E Thumb screws
- F Cable management cover
- G Slot cover
- H Graphic card holder
- I Water cooling reservoir / pump stand
- J 3.5" HDD trays (compatible for 2.5" HDD/SSD)
- K 3.5" HDD cage
- L 3.5" HDD trays (compatible for 2.5" HDD/SSD)
- M Air filter for bottom panel
- N Air filter for top panel
- O Air filter for front panel
- P Top panel
- Q 3 x 140 / 3 x 120mm fans for front panel (optional)
- R 2 x 140 / 3 x 120mm fans for top panel (optional)
- S 120mm fan for rear panel (pre-installed)

Installing the Front I/O Connectors

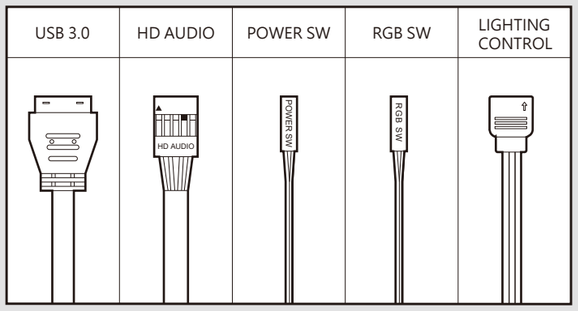

FEATURES

Distinctive Style with Elegant Design
DarkBlader-G's brushed aluminum front panel and asymmetrical design bring a unique and modern style to your build.

Enjoy the Dazzling RGB Show
The integrated lighting button allows DarkBlader-G to display amazing lighting effects. It can also work to a compatible motherboards' 5V connection for system-wide lighting synchronization. The powerful lights come out of stylish panel and the reflective surroundings helps reinforce the RGB effects.

Massive Visibility
The full tempered glass panels not only help you to display the interior high-end components, but also showcase the stunning RGB lighting.

Ultimate Cable Management
The cable management bar at the left side and the cable management cover at the other side provide a clean view and excellent airflow. Moreover, the graphic card holder helps your high-performance components with better stability.

Top-notch Gaming Hardware
To offer top-notch performance, DarkBlader-G is able to house a mighty build. Its excellent support for high-end graphics cards and up to E-ATX motherboards bring you unprecedented levels of freedom when designing your system.

Superior Cooling
DarkBlader-G allows you to create impressive cooling solutions. With great support for up to 360mm water cooling radiator and seven fans, you will enjoy more than enough cooling horsepower to keep advanced components safe from overheating.

Model Name	DarkBlader-G
Case Form Factor	Full Tower
Motherboard Type	Mini ITX / Micro ATX / ATX / CEB / *E-ATX
Dimension	232 (W) x 523 (H) x 518 (D) mm / 9.13 (W) x 20.6 (H) x 20.4 (D) inch
I/O Panel	USB3.0 x 2 , Mic x 1 , Audio x 1 , RGB Control Button
Case Drive Bays	3.5" : 4 max.
	2.5" : 4 max.
Expansion Slots	8 + 2
Cooling Fan Support	Front : 120mm x 3 / 140mm x 3
	Top : 120mm x 3 / 140mm x 2
	Rear : 120mm x 1 (pre-installed)
Maximum Number of Fans	7 Max.
Water Cooling Radiator Support	Front : **360mm / 280mm / 240mm / 140mm / 120mm
	Top : **360mm / 280mm / 240mm / 140mm / 120mm
	Rear : 120mm
Max. Graphics Card Length	380mm / 15inch
Max. CPU Cooler Height	170mm / 6.7inch
Max. PSU Length	200mm / 7.9inch
PSU	Standard ATX PS2
Onboard Lighting System	Intergrated Lighting with Addressable RGB LEDs and Dynamic Lighting Effects in the Front Panel

Specifications might vary depending on the country or region of sale.
* Please remove the cable bar before installing an E-ATX motherboard.
* *Choose either of front or top to install a 360mm radiator.

ENGLISH
- Elegant brushed aluminum front panel
- Integrated RGB system with 5V RGB motherboard synchronization
- Massive tempered glass side panels
- Ultimate cable management for a clean view
- Support for motherboard up to E-ATX form factor
- Up to 360mm water cooling radiator and seven fans

FRANÇAIS
- Panneau frontal élégant en aluminium brossé
- Système RGB intégré avec synchronisation de la carte mère RGB 5V
- Panneaux latéraux massifs en verre trempé
- Gestion de câble ultime pour une vue nette
- Prise en charge de la carte mère jusqu'au facteur de forme E-ATX
- Radiateur de refroidissement à eau jusqu'à 360mm avec sept ventilateurs

HUNGARIAN
- Elegáns, csiszolt alumíniumból készült elülső panel
- Integrált RGB-rendszer, 5 V-os RGB alaplap-szinkronizálással
- Masszív, temperált üvegből készült oldalsó panelek
- A kábelek valóban rendezettek és áttekinthetők
- Alaplap-támogatás akár E-ATX formátumú faktorig is
- Maximum 360 mm-es, vízhűtéses radiátor, hét darab ventilátorral

日本語
.エレガントなヘアライン加工アルミニウム製フロントパネル
.RGBシステムは5VのマザーボードのRGB効果に同期します
.強化ガラスウィンドウで、PCの内部構造が見えます
.優れたケーブルマネジメント
.E-ATXマザーボードに対応しています
.最大360mmの水冷ラジエーターと7個のファンを装着できます

DEUTSCH
- Elegante Frontblende aus gebürstetem Aluminium
- Integriertes RGB-System mit 5-V-RGB-Motherboard-Synchronisierung
- Massive Hartglas-Seitenblenden
- Ultimative Kabelverwaltung für eine saubere Optik
- Unterstützt Motherboards bis zu einem E-ATX-Formfaktor
- Bis zu 360-mm-Wasser-Kühlkörper und sieben Lüfter

PORTUGUÊS
- Painel frontal de alumínio escovado elegante
- Sistema RGB integrado com sincronização de placa mãe de 5V RGB
- Painéis laterais de vidro temperado maciço
- Gerenciamento de cabos final para uma visão limpa
- Suporte para placa-mãe até o fator de forma E-ATX
- Radiador de arrefecimento a água de até 360 mm e sete ventiladores

한국어
- 우아한 브러쉬드 알루미늄 전면 패널
- 5V RGB 마더 보드 동기화 기능이있는 통합 RGB 시스템
- 단단한 강화 유리 측면 패널
- 깔끔한 시야를 위한 최고의 케이블 관리
- 최대 E-ATX 폼 팩터까지 마더 보드 지원
- 최대 360mm 수냉식 라디에이터 및 7 개의 팬

中 文
- 高质感铝拉丝金属面板
- RGB整合系统支援5V主机板灯效同步控制功能
- 全景钢化玻璃侧窗
- 简洁利落的卓越理线装置
- 最高支援E-ATX主机板
- 最高支援360mm水冷排与7个风扇

РУССКИЙ
- Элегантная передняя панель из полированного алюминия
- Интегрированная система RGB подсветки с 5V синхронизацией материнской платы
- Массивные боковые панели из закаленного стекла
- Максимальное распределение кабелей для чистого обзора
- Поддержка материнской платы до форм-фактора E-ATX
- Поддержка установки радиатора водяного охлаждения до 360 мм и семи вентиляторов

ITALIANO
- Elegante pannello frontale in alluminio spazzolato
- Sistema RGB integrato con sincronizzazione della scheda madre RGB 5 V
- Pannelli laterali in vetro temperato massiccio
- Massima gestione dei cavi per una visione nitida
- Supporto per scheda madre fino al fattore di forma E-ATX
- Radiatore per raffreddamento ad acqua fino a 360 mm e sette ventole

ESPAÑOL
- Elegante panel frontal de aluminio cepillado
- Sistema RGB integrado con sincronización de placa base con 5V RGB
- Grandes paneles laterales de vidrio templado
- Gestión de cables definitiva para una apariencia más limpia
- Soporte para placa base hasta factor de forma E-ATX
- Radiador de refrigerado de hasta 360 mm de agua y siete ventiladores

POLISH
- Elegancki panel przedni ze szczotkowanego aluminium
- Zintegrowany system RGB zsynchronizowany z płytą główną przez złącze RGB 5 V
- Panele boczne z litego szkła hartowanego
- Skuteczne uporządkowanie kabli zapewnia efektowny wygląd
- Obsługa płyt głównych w formacie do E-ATX
- Radiator do chłodzenia wody o rozmiarze do 360 mm i siedem wentylatorów

ДАТА ИЗГОТОВЛЕНИЯ ПРОДУКЦИИ
год и месяц изготовления продукции указаны в серийном номере продукта.
(существует 2 способа определения даты изготовления, оба способа описаны ниже)

A После S/N: первые две цифры означают год, вторые две – месяц изготовления.
Например, S/N: H**1702**000001 означает, что товар был произведен в феврале 2017 года.

B После S/N: если указаны буквы, то две буквы представляют цифры из таблицы ниже,и означают год, последующие две цифры – месяц изготовления.
Например, S/N: D**AG02**REVI000001 означает, что товар был произведен в феврале 2017 года.

A	B	C	D	E	F	G	H	I	J
1	2	3	4	5	6	7	8	9	0

• Например, AG = 17 = 2017 год

تعليمات التركيب و الأمان:
- عند التركيب أو التفكيك يجب التأكد من أن جميع الأسلاك مفصولة عن الكهرباء.
- يجب اتخاذ الإحترازات اللازمة لمنع الصعق الكهربائي.
- يجب إرتداء الملابس المناسبة أثناء تركيب/ تجميع الكمبيوتر.
- يجب تركيب كل قطعة بحذر و بمكانها المناسب.
- من يقوم بعلمية التركيب الشخص المختص فقط.

GLOBAL WARRANTY POLICY

WARRANTY PERIODS OF COUGAR GAMING DEVICES
Product : COUGAR DarkBlader-G
Warranty : 1 Year
•This warranty gives you specific legal rights. You may also have other rights granted under local law. These rights may vary.
•Only for electrical components.

Removing the top and the side panels

*Please take off the top panel before removing the side panels

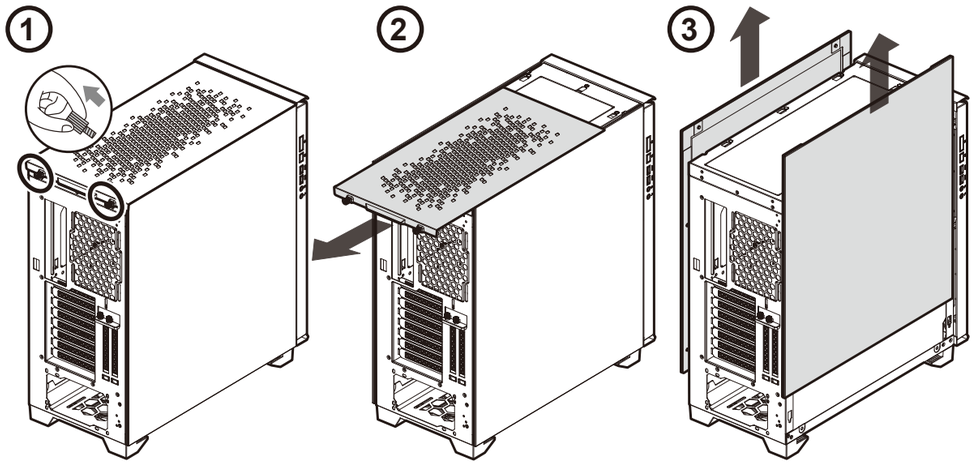

Removing the front panel

1. Please remove 2 screws at the right panel.
2. When pushing up the front panel, please don't pull the i/o cables too hard.

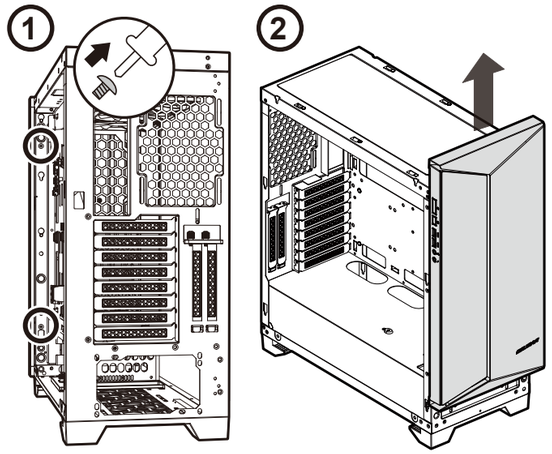

Opening the cable management cover

*Please press the 2 buckles at the right of the cable management cover before opening it.

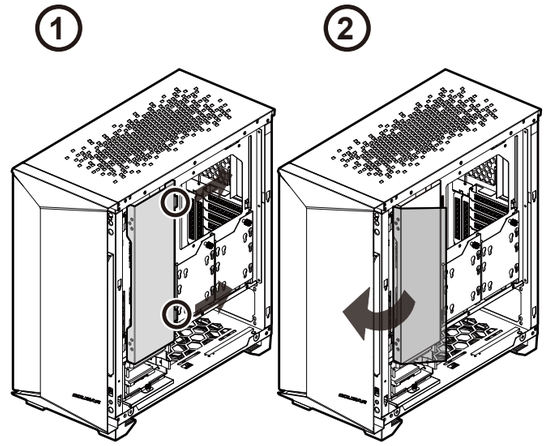

Removing the cable management bar

1. Please remove the cable management bar when installing E-ATX motherboard.
2. Please move the management bar forward when installing CEB motherboard.

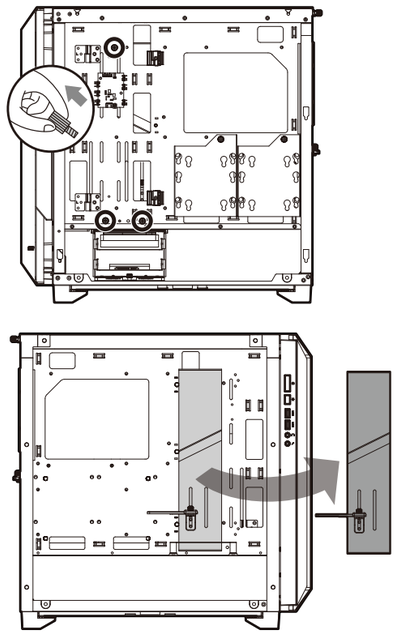

Installing water cooling radiators & cooling fans

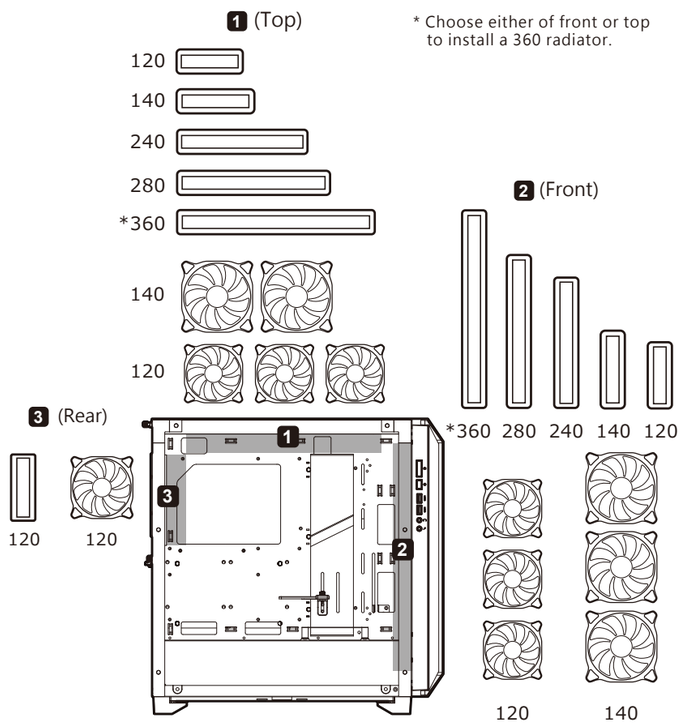

Installing the internal 2.5" SSDs & 3.5" HDDs

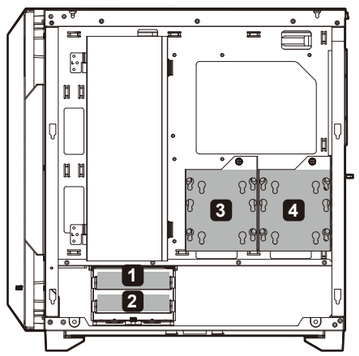

*Please use rubber mounts with screws when installing 2.5" SSDs & 3.5" HDDs.

2.5" SSD screws		X 12
3.5" HDD screws		X 12
2.5" SSD & 3.5" HDD rubber mounts		X 4

RGB & Fan control system

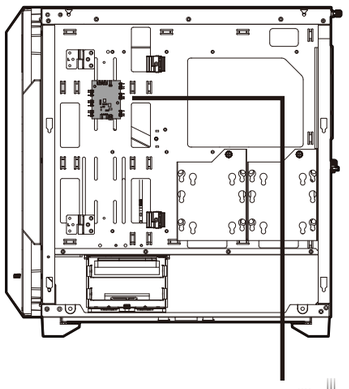

■ First Mode: 13 Preset Lighting Effects

You can use the front panel's RGB SW button to switch between the thirteen beautiful lighting effects we have preset for you.

■ Second Mode: Motherboard Synchronization

Please use the included adaptor (see picture below) to connect to a compatible motherboard's 3-pin 5V Addressable RGB header.
Then, press and hold the RGB SW button for 3-6 seconds, the LED strip at the front panel will flash in white for two consecutive times.

※If you press and hold the RGB SW button for 3-6 seconds again, the LED strip at the front panel will flash in white for two consecutive times. It will be returned to the First mode: 13 Preset Lighting Effects.

■ Third Mode: Turn off RGB LED lighting effects.

Please press and hold the RGB SW button for over 6 seconds and the LED strip at the front panel will flash in white for four consecutive times.

※If you press and hold the RGB SW button for 1 seconds again, the RGB LED lighting effects will be turned on.

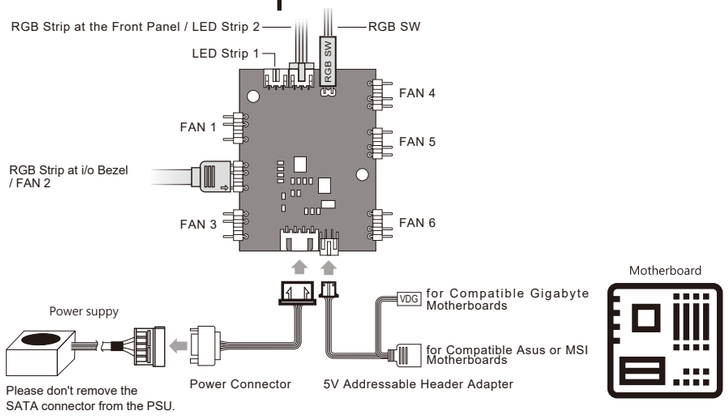

Installing PCI-E cards

■ Support for one vertical graphics card up to 380mm-long

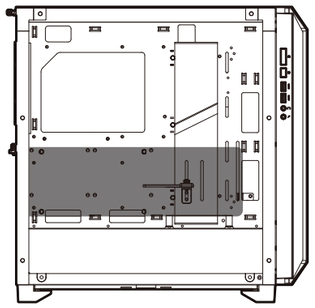

ACCESSORY KIT

Motherboard screws	X 11
Power supply screws	X 4
Stand-off	X 3
2.5" SSD screws	X 12
3.5" HDD screws	X 12
2.5" SSD & 3.5" HDD rubber mounts	X 4
Fan screws	X 12
Cable ties	X 4