Questo manuale d'istruzione è fornito da trovaprezzi.it. Scopri tutte le offerte per Epson CW-C4000e o cerca il tuo prodotto tra le migliori offerte di Macchine per Ufficio

trovaprezzi.it

Questo manuale d'istruzione è fornito da trovaprezzi.it. Scopri tutte le offerte per Epson CW-C4000e o cerca il tuo prodotto tra le migliori offerte di Macchine per Ufficio

EPSON®
EXCEED YOUR VISION

CW-C4000 Series

User's Guide

M00142600 EN

Contents

Before use

Manuals for This Product. 4
Downloading the Latest Version. 4
Symbols Used in This Guide. 5
About Models of this Product. 6
Gloss Black Ink/Matte Black Ink. 6
Software Introduction. 6
Product and Driver Versions. 7
How to Check the Product Version. 7
How to Check the Printer Driver Version. 7
Screens in This Manual. 7
Safety Precautions. 8
Cautions on Installation. 8
Cautions on Handling. 8
Cautions on Power Supply. 9
Cautions on Ink Cartridges. 11
Cautions on the Maintenance Box. 13
Caution Label. 14
Supported Paper. 15
Paper Shape/Form/Size. 15
Paper Types. 16
Paper That Cannot Be Used. 17
Part Names and Functions. 19
Front. 19
Inside. 20
Rear. 21
Connectors. 22
Operation Panel. 23

Basic Operation

Turning On or Off. 25
Turning the Power On. 25
Turning the Power Off. 25
Checking the Printer Status. 26
Checking the Paper Information. 26
Checking the Status of Consumables. 27
Printing Nozzle Check Patterns. 27
Printing Status Sheet. 28
Checking Network Connection and Settings. . . . 28
Replacing the Ink Cartridges. 29
Checking Amount of Ink Remaining. 29
How to Replace the Ink Cartridges. 29
Replacing the Maintenance Box. 32
Checking the Amount of Empty Space in the Maintenance Box. 32
How to Replace the Maintenance Box. 32
Printer Driver Settings. 35
Media Definition. 35
Media Name. 35
Width. 36
Length. 36
Gap Between Labels. 36
Media Form. 36
Media Saving. 37
Media Coating Type. 37
Print Quality. 37
Color Correction. 38
Spot Color Setting. 38
Settings For Paper Handling After Print. 38
Notification. 39
Pause. 39
Media Detection…. 39
Loading and Replacing Paper. 40
Loading Roll Paper. 41
Loading Fanfold Paper. 46
Adjusting the Shutters. 51
How to Remove Paper. 53

Maintenance

Cleaning the Exterior. 55
Cleaning the Platen. 56
Cleaning the Auto Cutter. 58
Cleaning the Print Head. 59
Printing Nozzle Check Patterns. 59
Head Cleaning. 60

Troubleshooting

A Message is Displayed on the Operation Panel. . . 62
Problems with Print Quality. 66
Horizontal White Banding. 66
White or Black Banding. 66
White or Black Banding near the Edges. 66
Printed Colors Are Wrong. 66
Printed Characters Look Blurred. 67
Print Position Shifts. 67
Paper is Smeared or Smudged with Ink. 67
Paper is Fed and Ejected, and an Error Occurs. . 67
Margins are Generated on Printed Labels. 68
Margins of Label Are Large. 68

Printing from a computer is impossible or becomes suddenly impossible. 69
Checking Whether the Printer Driver Is Installed. 69
The printer does not turn on. 69
Print Job is Canceled on PC but "Printing" Message on Printer Does Not Disappear. 69
Roll Paper is Jammed. 70
Fanfold Paper is Jammed. 72

Specifications

Product Specifications. 74
Electrical Specifications. 76
Overall Dimensions. 77
Environmental Specifications. 78
Paper Specifications. 79
Ink Cartridge. 80
Maintenance Box. 81

Appendix

Consumables and Options. 82
Ink Cartridge. 82
Maintenance Box. 83
OT-PT40. 84
OT-WA34. 86
Restriction of Use. 89
Notes. 90
Trademarks. 90

Before use

This chapter describes information you should know before using the product.

Manuals for This Product

Paper manual	**Start Here** Guides you through basic setup steps from unpacking to loading paper.
Manual viewable with PC	**User's Guide (This Manual)** Describes details about the functions and operating procedures of the product, maintenance information, and troubleshooting. It can be viewed from the supplied CD.
Manual viewable with PC	**CW-C4000 Series Technical Reference Guide** Provides information necessary for installing the product, performing daily tasks, and developing a system using the product. Download this document from the following URL. <https://www.epson-biz.com/>
Manual viewable with PC	**Online Video Manual** The videos provides a clear description of the setup procedure. Download this document from the following URL. <https://www.epson-biz.com/?prd=cw-c4k&inf=video> The contents of videos are subject to change without notice.

Downloading the Latest Version

The latest versions of the printer driver, utilities, and manuals can be downloaded from the following URL.

<https://www.epson-biz.com/>

Symbols Used in This Guide

The following symbols are used in this guide to indicate important information.

Symbols for Safety

The symbols shown below are used in this manual in order to ensure safety and proper use of this product and to prevent danger to you and other persons, and property damage. Be sure that you completely understand their meanings before reading this manual.

Warning	Handling the product improperly by ignoring this symbol can lead to death or serious injury.
Caution	Handling the product improperly by ignoring this symbol can lead to injury and property damage.

Symbols for General Information

Important	Indicates information with which you must comply when using the product. Mishandling due to ignoring this information may cause the product to fail or malfunction.
Note	Indicates supplementary explanations and information you should know.
☞	Indicates a reference page containing related information.

About Models of this Product

Gloss Black Ink/Matte Black Ink

You can select which type of black ink to use from gloss black (BK) and matte black (MK). The printer prompts you to select it when you turn on the printer for the first time.

Supported paper types vary by the black ink type. See "Paper Specifications" on page 79.

Important	You cannot change the black ink type once you select the black ink type and let the printer charge the ink.

Software Introduction

The following introduces the software that can be installed from the CD-ROM included with the product.

Name	Overview
Install Navi	Allows you to install the printer driver and other software, and also connect the product with the computer.
Printer driver	Driver to print from Windows applications. The utility (CW-C4000 Series PrinterSetting) for configuring the printer settings can be started from the driver. For details on how to use the driver, refer to Help or the video.
EpsonNet Config	Tool to acquire or set network settings, such as TCP/IP of the product.
Color Tone Matching Assistant	Assists you to adjust colors of illustrations or letters. You can check how a specific color used in illustrations or letters will look on printouts.

Product and Driver Versions

How to Check the Product Version

You can check the version of your product firmware by printing the status sheet. Check the results of status sheet printing. ☞ "Printing Status Sheet" on page 28

You can also check the version on the operation panel.

[Menu] - [Printer Status/Print] - [Firmware Version]

How to Check the Printer Driver Version

You can check the version in the printer driver screen.

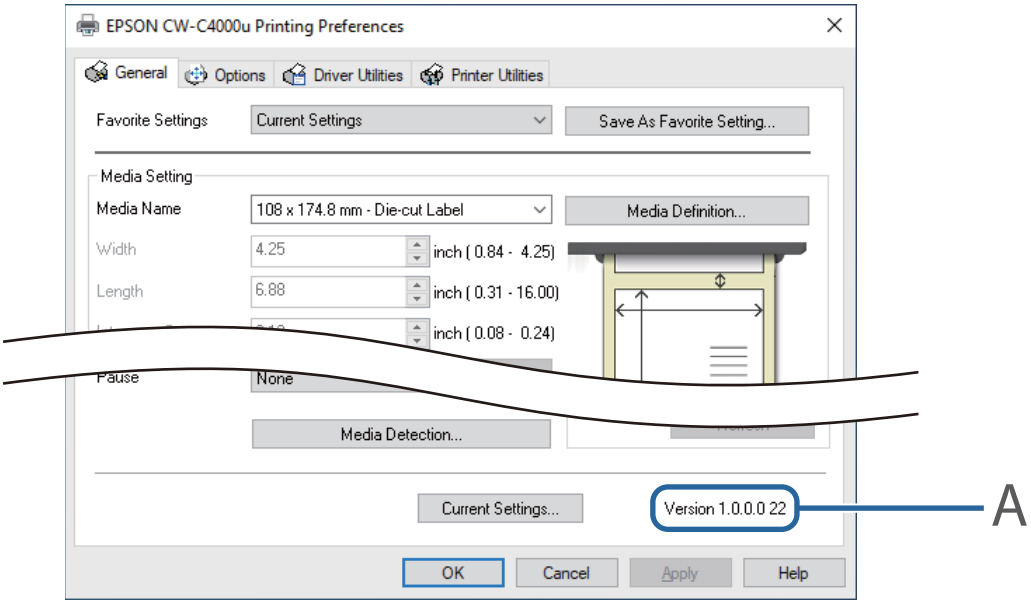

A: Printer driver version

Screens in This Manual

The screens in this manual and the screens actually displayed in Windows may differ depending on the product used and operating system. Unless otherwise specified, the screens in this manual are those when using Windows 10.

Safety Precautions

To ensure safe use of the product, be sure to read this manual and the other instruction manuals supplied with the product before use. Store this manual in a safe place so that you can resolve any unclear points regarding the product at any time.

Cautions on Installation

Warning

Do not cover the product with a cloth or install it in a poorly-ventilated location. Doing so can result in heat accumulated in the product causing a fire.

Caution

- Do not install/store the product in an unstable location or in a location subject to vibration from other devices. Equipment may fall or collapse, causing breakage and possible injury.
- Do not install the product in a location exposed to oily smoke or dust, or in a humid location. Otherwise electric shock or fire may occur.
- When lifting the product, perform the work with the correct posture. Lifting the product with an inappropriate posture may cause injury.

Cautions on Handling

Warning

- Do not use the product in a location with volatile substances such as alcohol or paint thinner present, or near fire. Otherwise electric shock or fire may occur.
- Shut down the product immediately if it produces smoke, a strange odor, or unusual noise. Otherwise electric shock or fire may occur. If an abnormality occurs, immediately turn off the power and remove the plug from the outlet, and then contact qualified service personnel for advice.
- Shut down the product immediately if a foreign object or water or other liquid gets inside the product. Otherwise electric shock or fire may occur. Immediately turn off the power and remove the plug from the outlet, and then contact qualified service personnel for advice.
- Do not disassemble the areas other than those mentioned in this manual.
- Never repair the product yourself as doing so is dangerous.
- Do not use the product in a location where inflammable gas, explosive gas, etc. is present in the atmosphere. Furthermore, do not use aerosol sprayers containing flammable gas inside or around the product. Doing so may cause fire.
- Do not connect cables in ways other than those mentioned in this manual. Doing so may cause fire. It may also damage the other connected devices.

- Do not touch the areas inside the product other than those mentioned in this manual. Doing so may cause electric shock or burns.
- Do not insert metal or flammable materials, or allow them to fall into the product. Otherwise electric shock or fire may occur.
- If the screen of the printer is damaged, handle the liquid crystal inside it very carefully. Should any of the following situations arise, take emergency measures.
  - When any part gets onto your skin, wipe off the deposit, and wash the area properly with soap and water.
  - When any part gets into your eyes, flush them with clean water for at least 15 minutes, and thereafter, consult with a doctor.
  - When a part gets into your mouth, immediately consult with a doctor.

Caution

- Do not allow anyone to stand or place heavy objects on top of the product. In particular, be careful in the case of a household with children. Equipment may fall or collapse, causing breakage and possible injury.
- Install the cables and optional products in the proper direction according to the proper procedures. Doing so may cause fire or injury. Follow the instructions in this manual to install them properly.
- Before moving the product, shut down and unplug the product, and make sure that all the cables are disconnected. Failure to do so may damage a cable, causing electric shock or fire.
- Do not subject the product to vibration or shock while the power is on. Doing so may cause printing malfunction.
- Do not store or transport the product while it is tilted, standing, or upside down. Doing so may cause the ink to leak.
- Store the cutter in a place out of reach of children. There is a risk of injury from the cutter blade. When replacing the cutter, handle it with care.

Cautions on Power Supply

Warning

- Be sure to use the specified AC adapter (AC ADAPTER,K1 (Model: M248B)) only. In addition, do not use the specified adapter with another device. Otherwise electric shock or fire may occur.
- Observe the following points when handling the AC adapter. Otherwise electric shock or fire may occur.
  - Do not use in a location where rain or water will get on the AC adapter.
  - Do not suspend the product by the power cord.
  - Do not allow a clip or other metal object to touch the connectors.

- ❏ Do not cover with bedding.

- ❏ Do not allow dust or other foreign material to adhere to the power plug. Otherwise electric shock or fire may occur.
- ❏ Insert the power plug securely all the way into the outlet. Otherwise electric shock or fire may occur.
- ❏ Do not use a power cord other than that supplied with the product. In addition, do not use the supplied power cord with another device. Otherwise electric shock or fire may occur.
- ❏ Do not use a damaged power cord. Otherwise electric shock or fire may occur. Contact qualified service personnel for advice if the power cord is damaged. Furthermore, observe the following points so as not to damage the power cord.
  - ❏ Do not modify the power cord.
  - ❏ Do not place heavy objects on the power cord.
  - ❏ Do not forcibly bend, twist, or pull the power cord.
  - ❏ Do not lay the power cord near a heating appliance.
- ❏ Do not insert or remove the power plug with a wet hand. Doing so may cause electric shock.
- ❏ Do not connect many power cords to one outlet. Doing so may cause fire. Supply power directly from a power outlet.
- ❏ Regularly disconnect the power plug from the outlet and clean the base of the prongs and between the prongs. Leaving the power plug connected to the outlet for a long period of time may cause dust to accumulate on the base of the power plug prongs, resulting in a short and fire.
- ❏ Hold the plug and do not pull the cord when disconnecting the power plug from the outlet. Pulling the cord may damage the cord or deform the plug, causing electric shock or fire.
- ❏ Do not remove and insert the power plug from/to the outlet while the printer is powered on. Doing so may cause electric shock.

Caution

To ensure safety, unplug the product before leaving it unused for an extended period.

Cautions on Ink Cartridges

Caution

- The ink cartridges that can be used differ depending on the model number of the product. Use ink cartridges suitable for the model number of your printer.

  "Ink Cartridge" on page 80

- Shake new ink cartridges well before installing them.
- Do not touch the IC chip on an ink cartridge. Doing so may result in normal operation and printing becoming no longer possible.
- The product uses ink cartridges equipped with IC chips to manage the amount of ink used and other information so ink cartridges are usable even if they are removed and reinstalled. However, if an ink cartridge with not much ink remaining is removed and reinstalled, it may not be usable. Some ink is consumed each time cartridges are installed because the product automatically checks their reliability.
- When replacing the black ink cartridge, make sure to replace with a cartridge of the same type of black ink. The printer does not work if you install a cartridge of different type of black ink.
- Install ink cartridges of all colors. Printing is not possible if even only one ink cartridge is missing.
- Since ink cartridges are designed to stop the operation before ink runs out completely to maintain the quality of the print head, some ink remains in the used ink cartridges.
- All the ink colors are consumed also for the maintenance operations when an ink cartridge is replaced and for print head cleaning.
- Do not turn off the power or open the ink cartridge cover during ink charging (while the ⏻ (power) LED lamp is flashing). Opening the cover may cause the ink to be recharged, resulting in more ink being consumed. Also, it may result in normal printing becoming no longer possible.
- Even for monochrome printing, all the ink colors are used in an operation designed to maintain the printing and print head quality.
- Do not disassemble an ink cartridge. Doing so may cause ink to get into eyes or onto skin.
- Do not disassemble or modify an ink cartridge. Doing so may cause printing malfunction.
- Use of old ink cartridges may result in reduced print quality. Use ink cartridges up within six months after opening the packages. The usage period for ink cartridges is printed on the packaging of the individual ink cartridges.
- If ink contacts your skin, eyes, or mouth, take the following actions.
  - When ink gets onto your skin, immediately wash the area with soap and water.
  - When ink gets into your eyes, immediately flush them with water. Leaving the ink as is may result in bloodshot eyes or mild inflammation. If something is wrong, immediately consult with a doctor.
  - When ink gets into your mouth, immediately spit it out and consult with a doctor.

Before use

- There may be some ink around the ink supply port on a removed ink cartridge. Take care so that it does not stain the desk or other surface.
- Do not open an ink cartridge package until you are ready to install the ink cartridge in the product.
- Do not shake an ink cartridge too hard. The ink cartridge may leak if you shake it around too much or push the sides strongly.
- Do not allow foreign objects to fall into the cartridge installation section. Doing so may result in normal printing becoming no longer possible. Remove any object that falls into the installation section, taking care not to damage the section.
- When ink is charged the first time (right after purchase), ink is consumed for filling the print head nozzles (ink discharge holes) to get ready for printing. Therefore, the number of the sheets that can be printed may be fewer than for cartridges installed later.
- When the printer is powered off with the ⏻ (power) button, the print head is automatically capped to prevent the ink from drying. When you will not use the printer after installing the ink cartridges, be sure to turn the power off with the ⏻ (power) button. Do not pull out the power plug or turn off the breaker while the power is on.
- Printing on water-repellent paper such as art paper, which is slow-drying, may cause print stains. Also, if you print on glossy paper, fingerprints may get on the paper or ink may adhere to your fingers when you touch the print surface. Select and use paper that will not cause print stains.
- Store the ink cartridges in a place out of reach of children.
- Epson recommends storing ink cartridges in a cool and dark place.
- If you wish to use ink cartridges that have been stored in a cold place for a long period of time, leave them for at least 3 hours in a place that is at room temperature before use.
- Do not remove the ink cartridges from the product when storing or transporting the product.

Cautions on the Maintenance Box

Caution

- ❏ Store in a place out of reach of children. Do not drink any adhered ink.
- ❏ Do not disassemble or modify the maintenance box. Doing so may cause ink to get into eyes or onto skin.
- ❏ Do not touch the IC chip on the maintenance box.
- ❏ If a maintenance box that can still be used has been removed and left detached for a long period of time, do not reuse it.
- ❏ Do not peel off the film from the top surface of the maintenance box.
- ❏ If ink contacts your skin, eyes, or mouth, take the following actions.
  - ❏ When ink gets onto your skin, immediately wash the area with soap and water.
  - ❏ When ink gets into your eyes, immediately flush them with water. Leaving the ink as is may result in bloodshot eyes or mild inflammation. If something is wrong, immediately consult with a doctor.
  - ❏ When ink gets into your mouth, immediately spit it out and consult with a doctor.
- ❏ Do not shake a used maintenance box too hard. The ink may leak from the maintenance box if you swing or shake it too hard.
- ❏ Avoid storing the maintenance box under high temperatures or in a frozen state.
- ❏ Keep it away from direct sunlight.

Caution Label

The labels affixed to the product indicate the following cautions.

Caution	Do not touch the blade of the auto cutter with a hand. Doing so may cause injury. 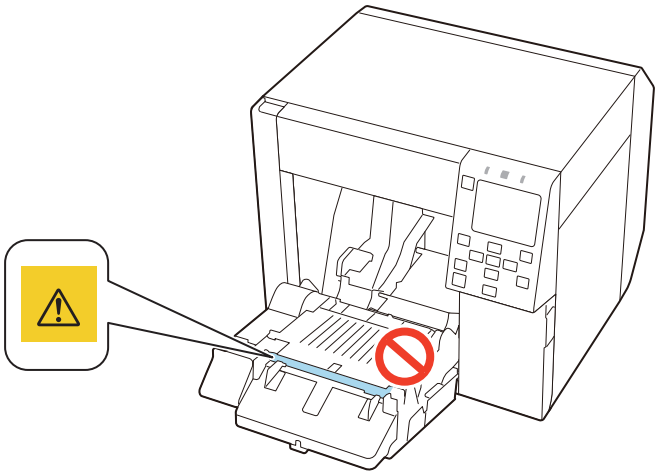
Caution	Do not touch the movable blade of the auto cutter with a hand. Doing so may cause injury. 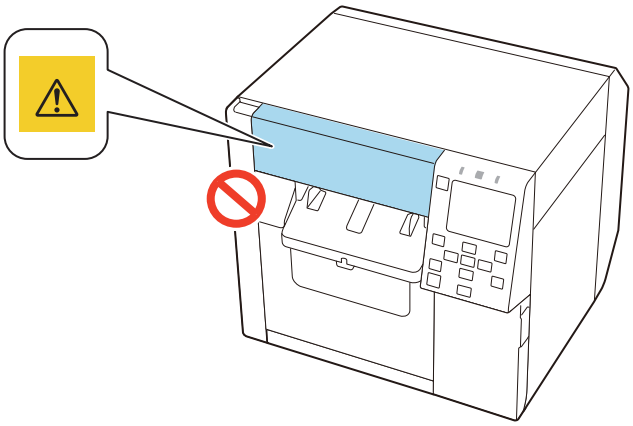
Caution	To prevent fingers from being trapped, the lock mechanism is activated to stop the cover closing if the unit is raised up from the installation surface. When using the product, install it on a level surface. 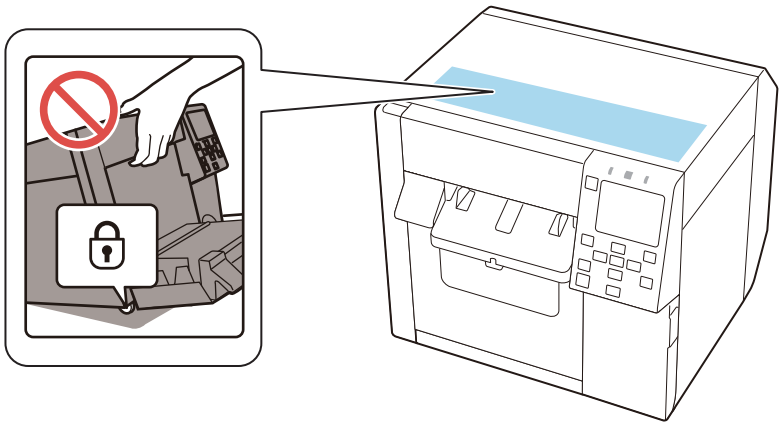

Supported Paper

This section describes about shape, form, size and type of paper that can be used by this printer, and paper that cannot be used.

For more details, see the CW-C4000 Series Technical Reference Guide.

Paper Shape/Form/Size

Forms of paper	Paper shapes	Paper width (mm)	Backing paper width (mm)	Label width (mm)	Gap between labels (mm)
Continuous plain paper without black marks*1	Roll paper	25.4 to 108	---	---	---
Continuous plain paper without black marks*1	Fanfold paper 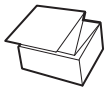	50 to 108	---	---	---
Continuous plain paper (without black marks)	Roll paper 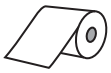	25.4 to 108	---	---	---
Full-page label with or without black marks	Roll paper 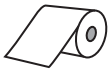	---	25.4 to 112	21.4 to 108	---
Die-cut label (Gap*2)	Roll paper	---	25.4 to 112	21.4 to 108	2.0 to 6.0
Die-cut label without black marks*1 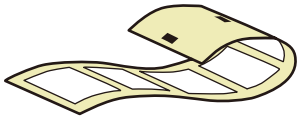	Roll paper 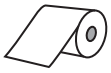	---	25.4 to 112	21.4 to 108	2.0 to 6.0

Forms of paper	Paper shapes	Paper width (mm)	Backing paper width (mm)	Label width (mm)	Gap between labels (mm)
Die-cut label without black marks*1 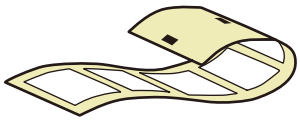	Fanfold paper 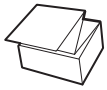	---	50 to 112	46 to 108	2.0 to 6.0
Wristband paper without black marks*1 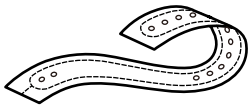	Roll paper 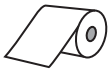	Contact qualified service personnel for advice.	---	---	---

*1: The print position is detected based on the black marks printed on the back of the paper.

*2: The print position is detected based on the gaps between labels.

Note	❏ When labels less than 10 mm in length are cut automatically, the printed label may adhere to the cutter blade and become difficult to remove. ❏ Depending on shape, thickness, and stiffness of die-cut labels, the labels may peel off their backing paper inside the printer. When you want to use die-cut labels that do not meet the paper specifications, contact qualified service personnel for advice.

Paper Types

Supported paper types vary depending on the type of black ink as shown below.

Paper Type	When using Matte Ink	When using Gloss Ink
Plain paper	✓	-
Matte paper	✓	✓
Texture Paper	✓	-
Synthetic	✓	✓
Wristband paper	✓	-
Glossy paper	-	✓
Glossy Film	-	✓
High Glossy Paper	-	✓

Paper That Cannot Be Used

Do not load paper like the following. Such paper will cause paper jams and print stains.

❏ Thermal paper

❏ Paper joined together by tape, etc.

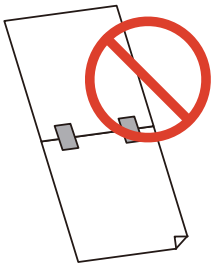

❏ Paper joined to the core by tape, etc.

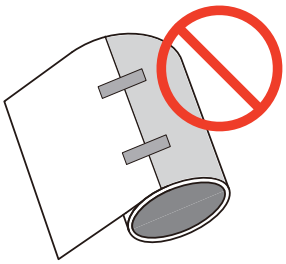

❏ Paper of A size, B size, etc.

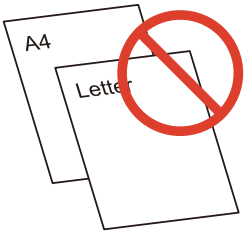

❏ Paper with transparent backing paper

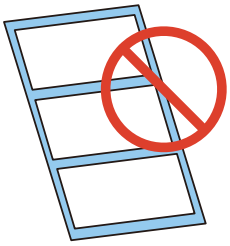

Part Names and Functions

This section describes the main operation parts.

Front

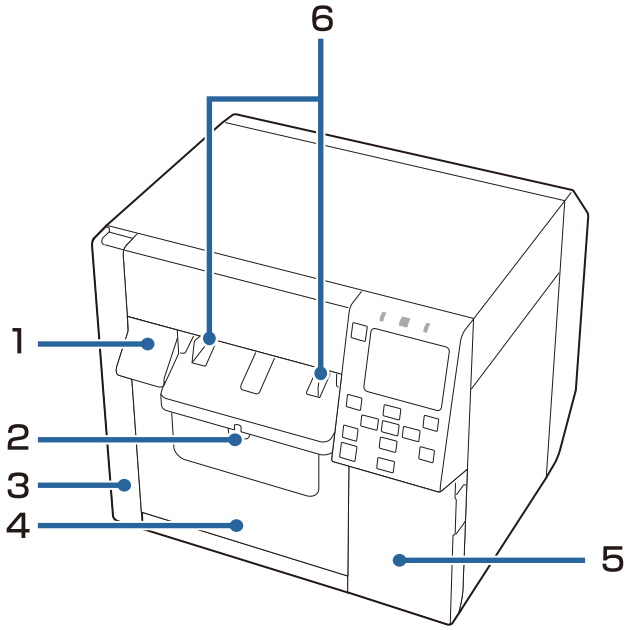

No.	Name	Description
1	Release lever	Pull this lever towards you to open the front cover.
2	Lock lever (paper ejection guides)	Press down this level to enable adjustment of the paper ejection guides. Pull up this lever until it clicks into place to lock the paper ejection guides.
3	Maintenance box cover	Open this cover to install or replace the maintenance box. ☞ "Replacing the Maintenance Box" on page 32
4	Front cover	Open this cover to load or replace paper.
5	Ink cartridge cover	Open this cover to install or replace the ink cartridge. ☞ "Replacing the Ink Cartridges" on page 29
6	Paper ejection guides	These guides are for preventing the paper from getting out of position when ejected. Adjust them to match the paper width.

Inside

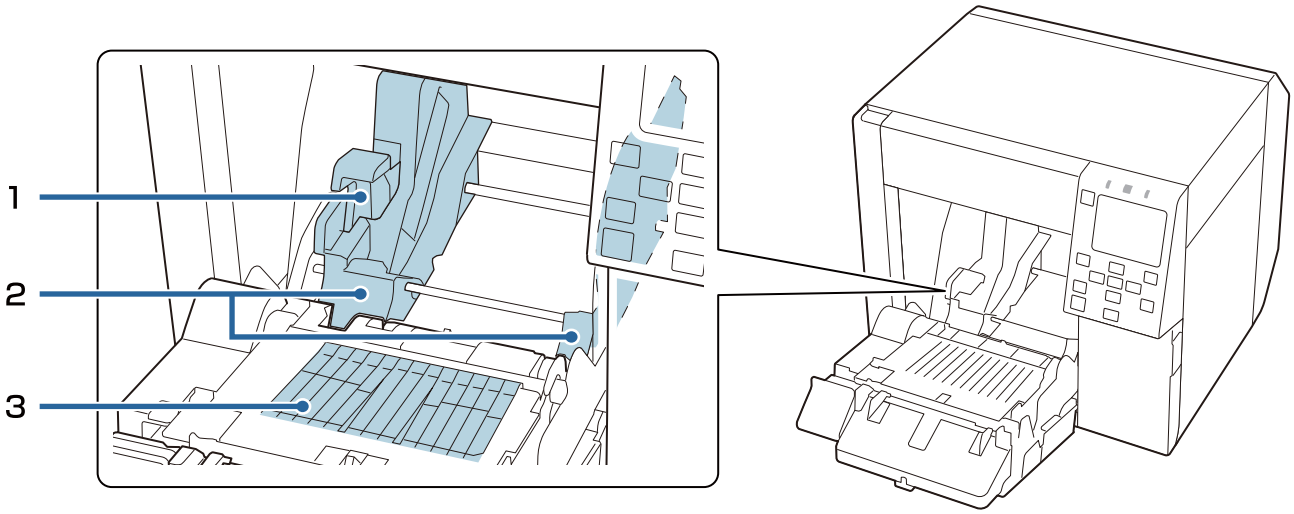

No.	Name	Description
1	Lock lever (roll paper guides)	Pull up this level to enable adjustment of the roll paper guides. Push down this lever to lock the roll paper guides.
2	Roll paper guides	These guides are for fixing the roll paper in place. Adjust them to match the paper width.
3	Shutter	Adjust this to match the paper width. "Adjusting the Shutters" on page 51

Rear

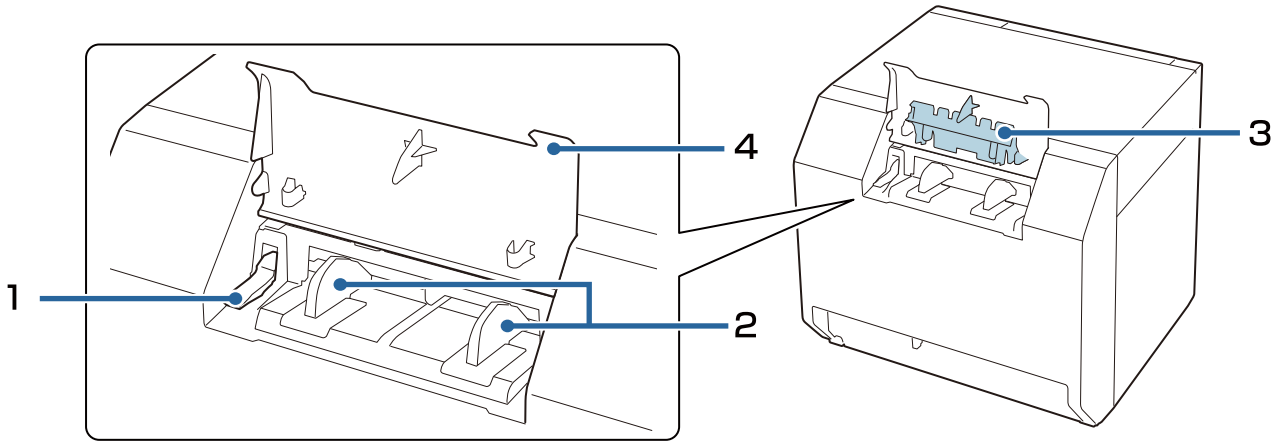

No.	Name	Description
1	Lock lever (fanfold paper guides)	Pull up this lever to enable adjustment of the fanfold paper guides. Pull down this lever to lock the fanfold paper guides.
2	Fanfold paper guides	These guides are for preventing the paper from getting out of position when fed into the printer. Adjust them to match the paper width.
3	Paper feed guide	Attach this cover inside the front cover when using fanfold paper.
4	Rear cover	Open this cover to load or replace the fanfold paper. "Loading Fanfold Paper" on page 46

Connectors

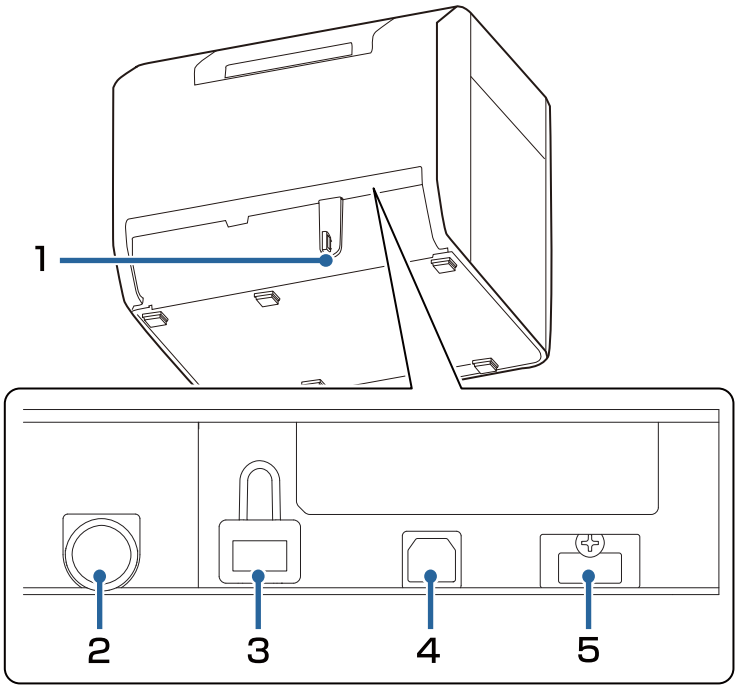

No.	Name	Description
1	Wire saddle	Pass the USB cable through this saddle to prevent disconnection of the cable.
2	AC inlet	Connect the power cable.
3	LAN port	Connect a LAN cable.
4	USB B port	Connect a USB Type B cable.
5	USB A port (for connecting an optional device)	Connect the optional Wireless LAN Unit.

Operation Panel

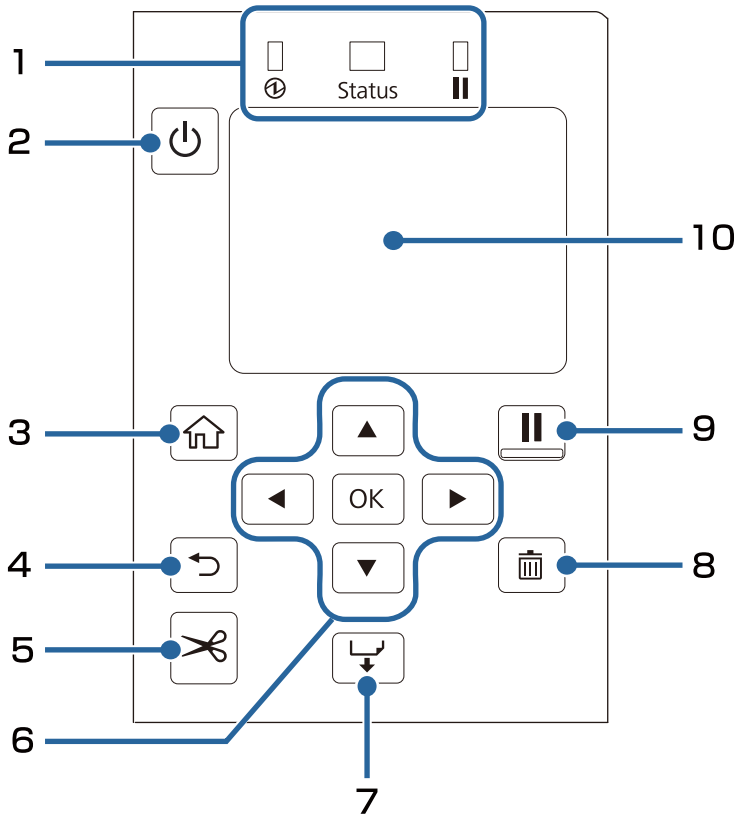

No.	Name	Description
1	LED	The status of the printer can be checked from the flashing of the LEDs. For more details, see the CW-C4000 Series Technical Reference Guide. ❏ (power) LED Stays on while the printer is on. Flashes during printing or charging ink. ❏ Status LED Stays on or flashes while an error or problem is occurring. ❏ (pause) LED Stays on or flashes while the printer is paused.
2	(power) button	Turns on or off the printer.
3	(home) button	Displays the Home screen.
4	(back) button	Use to return to the previous screen.
5	(cut) button	Use to cut paper.
6	▲◀▼▶ (arrows) buttons and OK button	Use the ▲◀▼▶ buttons to select a menu item, and then press the OK button to activate the selected menu or setting.
7	(feed) button	Press this briefly to feed paper by one page. Hold down to feed paper continuously.
8	(cancel) button	Cancels current print job.

No.	Name	Description
9	❚❚ (pause) button	If this button is pressed during printing, printing is stopped after printing of the current page is finished. Press this button again to resume printing. If this button is pressed while the printer is idling, the printer is paused. Press this button again to return the printer to its idling state.
10	Screen	Status of the printer, menus, and error messages are displayed.

Basic Operation

This chapter describes the basic operating procedures of the printer.

Turning On or Off

Turning the Power On

Hold down the ⏻ (power) button until the ⏻ (power) LED lights up.

Turning the Power Off

Hold down the ⏻ (power) button until a power-off confirmation message is displayed. Then select [Yes] on the confirmation screen. The ⏻ (power) LED goes out and the printer is turned off.

Checking the Printer Status

The status of the printer can be checked from the lighting and flashing of the LEDs, and from the printer screen.

Also, by printing the status sheet, you can check the printer settings and condition of the nozzles.

☞ "Printing Status Sheet" on page 28

Checking the Paper Information

Information of currently loaded paper; paper type and paper source setting is displayed on the home screen.

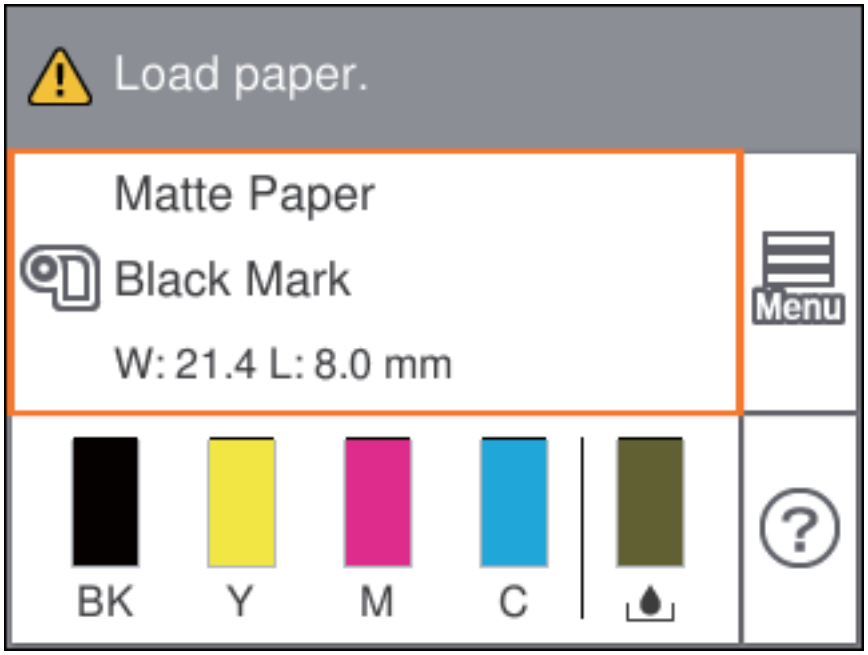

Note	Touch this area to directly access the Paper Settings menus. You can also make the paper settings using the printer driver. ☞ "Printer Driver Settings" on page 35 If the settings differ between the operation panel and the printer driver, the settings of the printer driver are applied.

Checking the Status of Consumables

The status of the ink cartridges and the maintenance box can be checked on the screen.

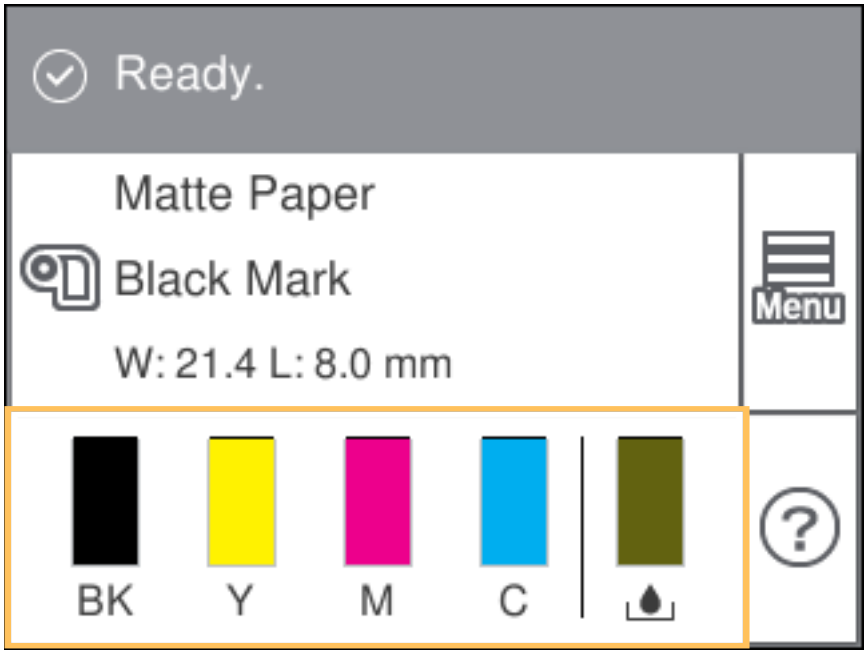

Printing Nozzle Check Patterns

By printing the nozzle check patterns, you can check the print head nozzles for clogging.

To print the check patterns, select the menu as described below.

Using the Operation Panel

[Menu] - [Maintenance] - [Print Head Nozzle Check]

Using the Printer Driver

Click [Nozzle Check] on the [Printer Utilities] tab.

Using the WebConfig

Select [Print Nozzle Check Pattern] on the [Maintenance] window, and then click [Start].

Printing Status Sheet

By printing the status sheet, you can check the firmware version and printer settings such as the print mode and media detection settings. The following types of status sheets can be printed from the operation panel.

[Menu] - [Printer Status/Print] - [Print Status Sheet]

Status sheet print sample	Status sheet (network settings) print sample
<Printer Status Sheet> Sheet Output Time YYYY.MM.DD hh:mm <Basic Information> Model XX-XXXXX BK Serial Number XXXXXXXXXX Main Firmware Version XXXXXXXX MAC Address XX:XX:XX:XX:XX:XX IP Address Setting Auto/Manual IP Address XXX.XXX.XXX.XXX Subnet Mask XXX.XXX.XXX.XXX Gateway Address XXX.XXX.XXX.XXX Head ID XXXXXXXXXXXXXXXXXXXXXXXXXXXXXXXXXX 03 xxxx yyyy/mm/dd hh:mm 04 xxxx yyyy/mm/dd hh:mm 05 xxxx yyyy/mm/dd hh:mm 06 xxxx yyyy/mm/dd hh:mm 07 xxxx yyyy/mm/dd hh:mm 08 xxxx yyyy/mm/dd hh:mm 09 xxxx yyyy/mm/dd hh:mm 10 xxxx yyyy/mm/dd hh:mm	HHH NetWork Status Sheet HHH <General Info> MAC Address xx:xx:xx:xx:xx:xx Firmware xxxxxxxxx <Ethernet> Network Status Auto(Disconnected) <TCP/IP IPv4> Obtain IP Address Manual IP Address xxx.xxx.xxx.xxx Subnet Mask xxx.xxx.xxx.xxx Default Gateway xxx.xxx.xxx.xxx HHHHHHHHHHH 1/1 HHHHHHHHHHH

Note	❏ You can also print a list of the fonts and bar codes that are already registered in the printer, or the newly registered images and templates. ❏ If the Wireless LAN Unit has been connected to the printer, wireless network status and settings are printed on the Network Settings section of the status sheet.

Checking Network Connection and Settings

You can check the network connection status and settings by printing a network connection check report.

For more details, see the CW-C4000 Series Technical Reference Guide.

Replacing the Ink Cartridges

This section describes how to replace the ink cartridges.

Caution	Carefully read the cautions on handling before installing the ink cartridges. "Cautions on Ink Cartridges" on page 11

Checking Amount of Ink Remaining

You can check approximate remaining amount of ink on the operation panel or a computer.

Note	Even when the printer is low on ink, you can print until you are prompted to replace the ink cartridge. Replace the ink cartridge as necessary.

How to Replace the Ink Cartridges

The procedure below is for replacing the BK cartridge. Follow the same procedure for replacing the other color cartridges.

Important	❏ When replacing the black ink cartridge, make sure to replace with a cartridge of the same type of black ink. The printer does not work if you install a cartridge of different type of black ink. ❏ Shake new ink cartridges well before installing them.

1 Open the ink cartridge cover.

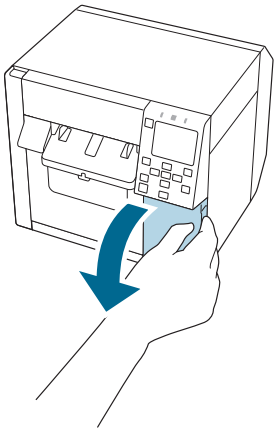

2 Press the lever down to remove the used ink cartridge.

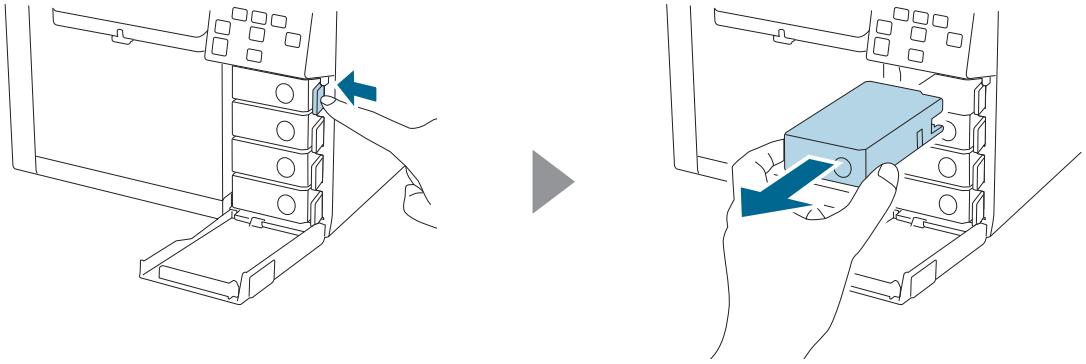

3 Shake the ink cartridge.

As shown in the figure below, shake the cartridge horizontally. Move the cartridge by about 5 cm to both directions, and repeat it about 15 times for about 5 seconds.

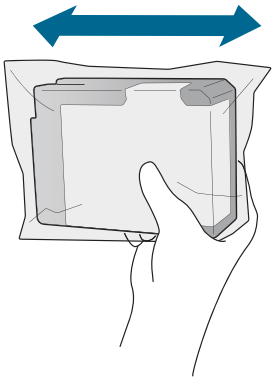

4 Take out the new ink cartridge from the bag.

"Cautions on Ink Cartridges" on page 11

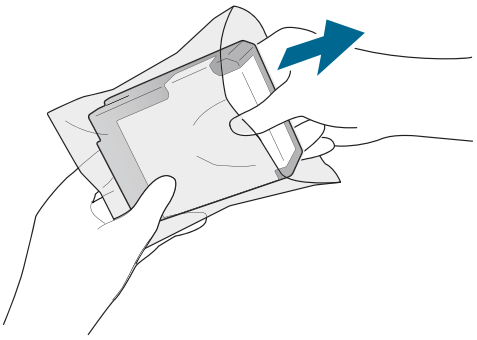

Caution	Do not touch the areas shown in the figure. 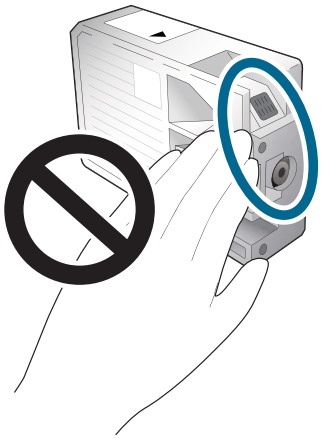

5 Install the ink cartridge.

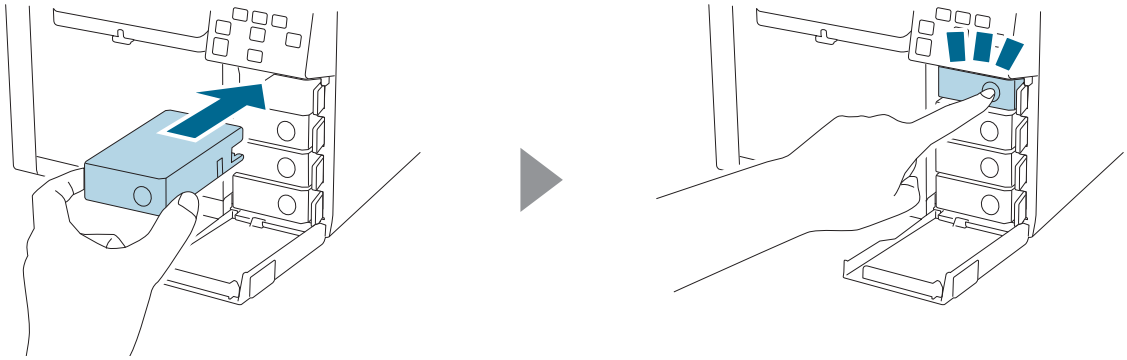

6 Close the ink cartridge cover.

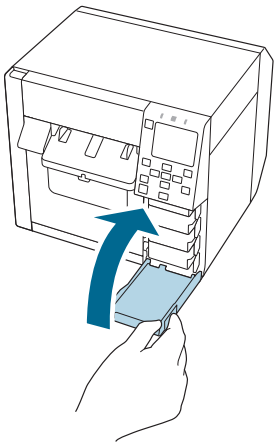

Replacing the Maintenance Box

This section describes how to replace the maintenance box.

Caution	Carefully read the cautions on handling before setting the maintenance box. "Cautions on the Maintenance Box" on page 13

Checking the Amount of Empty Space in the Maintenance Box

You can check approximate amount of empty space in the maintenance box on the operation panel or a computer.

Note	Even if the maintenance box is running low on space, you can still print until you are prompted to replace it. Replace the maintenance box with a new one as necessary.

How to Replace the Maintenance Box

1 Open the maintenance box cover.

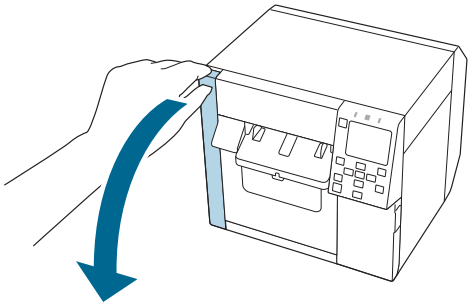

2 Take out the maintenance box.

When disposing of the used maintenance box, put it in a plastic bag that came with the new maintenance box.

"Disposal of Maintenance Box" on page 83

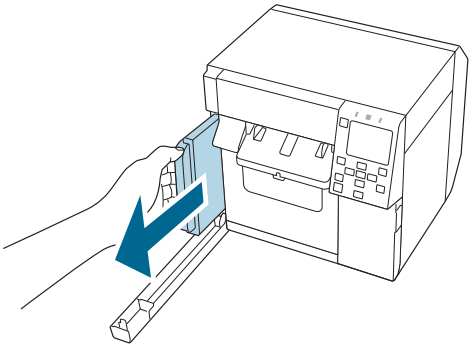

3 Take out a new maintenance box from the bag.

"Cautions on the Maintenance Box" on page 13

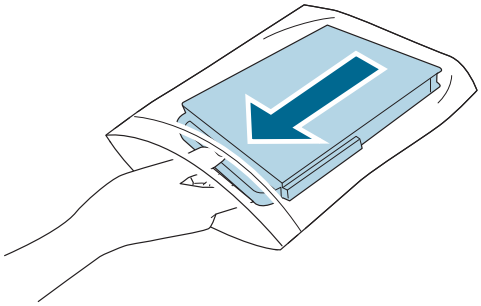

Caution	Do not touch the areas shown in the figure. 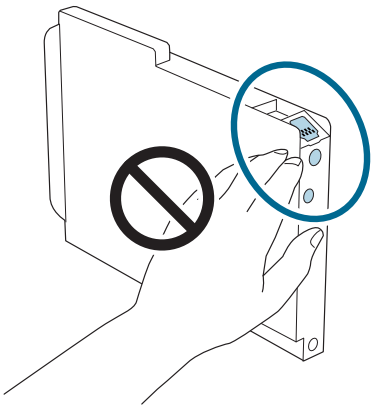

4 Insert the new maintenance box all the way in.

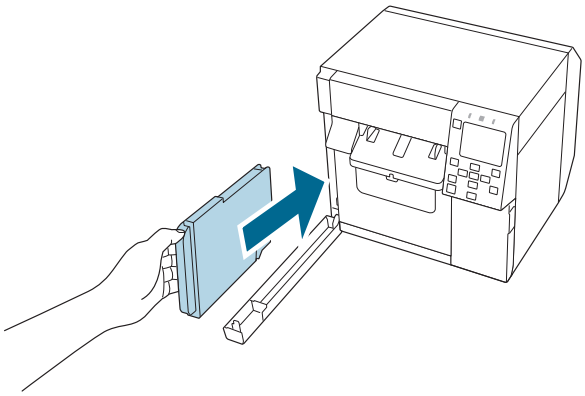

5 Close the maintenance box cover.

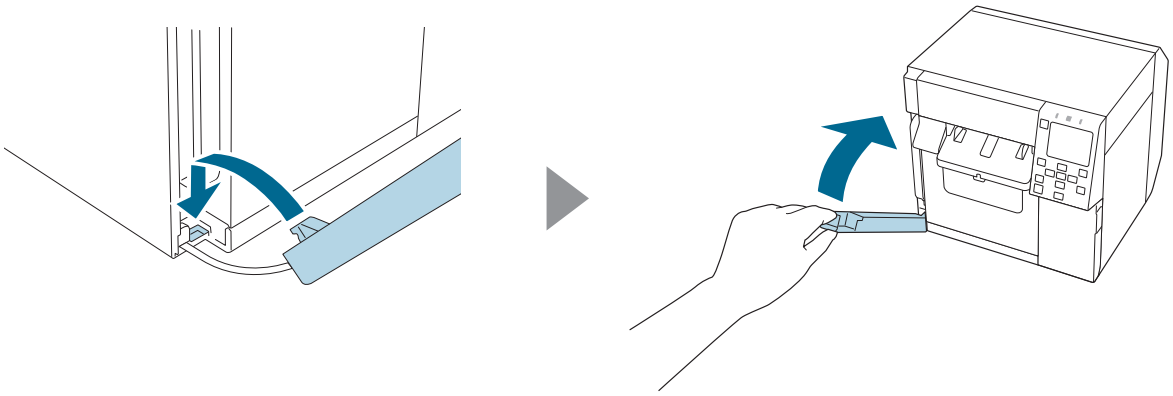

6 Press the ❚❚ (Pause) button.

Check that the printer is ready for printing by checking the home screen.

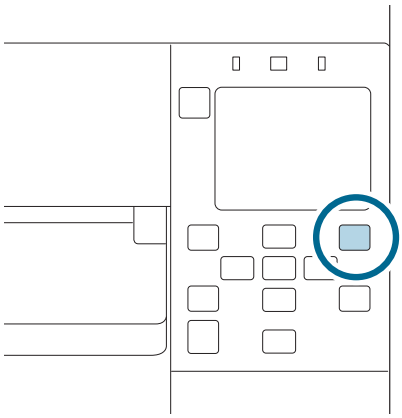

Note	It is recommended to clean the platen at the same time you replace the maintenance box. ☞ "Cleaning the Platen" on page 56 The non-woven cloth and cotton swabs used for cleaning are included in the replacement maintenance box. 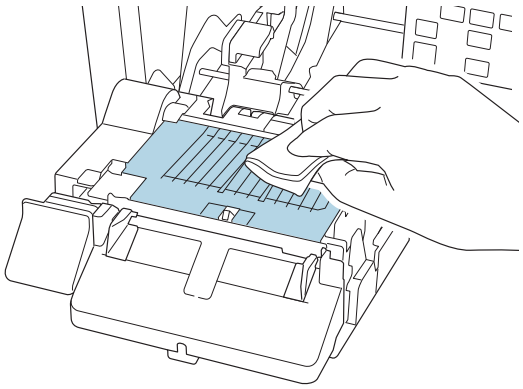

Printer Driver Settings

Set the basic items required for printing such as the size and form of media.

The printer driver is equipped with a help function. Right-click an item and then click Help to display an explanation on the item.

You can also learn how to configure the printer driver with videos. Access the videos from the following URL.

<https://www.epson-biz.com/?prd=cw-c4k&inf=video>

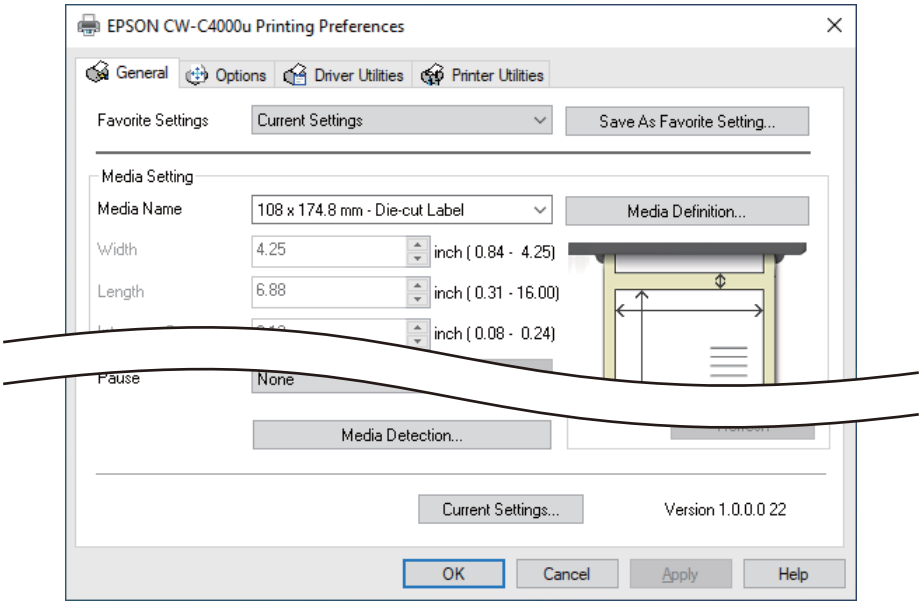

Note	If the settings on the printer (settable using the operation panel, CW-C4000 Series PrinterSettings, or WebConfig) differ from the printer driver settings, printing is performed by applying the printer driver settings.

Media Definition

The size, form, type, and other settings of frequently used paper can be registered as a media definition. The set media definition can be selected from the Media Name pull-down menu. This is convenient because you will not need to set the paper settings of the driver when printing from an application if you register a media definition in advance.

If you wish to set the paper size and other settings every time without registering a media definition, select [Custom] from the [Media Name] pull-down menu on the [General] tab. The various settings on the [General] tab will become available so that you can set the paper size and other settings.

Media Name

- ❏ Media Size Reduction
- ❏ 108 x 174.8 mm - Die-cut Label* (Initial setting)

❏ Custom

*: This setting is suitable for printing the roll paper included with the product.

Width

When Media Form is other than Continuous paper or Wristband Paper

21.4 to 108.0 mm

Initial setting: 108.0 mm

When Media Form is Continuous paper or Wristband Paper

25.4 to 108.0 mm

Initial setting: 108.0 mm

Length

Can be specified from 8 to 406.4 mm

Initial setting: 174.8 mm

Gap Between Labels

When Media Form is Die-cut Label

2 to 6 mm

Initial setting: 3 mm

When Media Form is other than Die-cut Label

0 to 6 mm

Initial setting: 3 mm

Media Form

❏ Die-cut label (gap detection) (Initial setting)

❏ Die-cut label (black mark detection)

❏ Full-page Label (black mark detection)

❏ Full-page Label (no detection)

❏ Continuous paper (black mark detection)

- ❏ Continuous paper (no detection)
- ❏ Wristband (black mark detection)

Media Saving

Enabled only when [Full-page Label (no detection)] or [Continuous paper (no detection)] is selected as the [Media Form].

- ❏ Eliminate Lower Margin
- ❏ Eliminate Lower And Upper Margin
- ❏ No Saving (Initial setting)

Media Coating Type

- ❏ Plain Paper
- ❏ Matte Paper (Initial setting)
- ❏ Synthetic
- ❏ Texture Paper
- ❏ Wristband Paper
- ❏ Glossy Paper
- ❏ Glossy Film
- ❏ High Glossy Paper

Print Quality

When Media Coating Type is Plain Paper

- ❏ Max Speed
- ❏ Speed (Initial setting)
- ❏ Normal
- ❏ Quality

When Media Coating Type is Matte Paper, Synthetic, or Texture Paper

- ❏ Max Speed
- ❏ Speed

- ❏ Normal (Initial setting)
- ❏ Quality

When Media Coating Type is Wristband Paper

- ❏ Max Speed
- ❏ Speed (Initial setting)
- ❏ Normal

When Media Coating Type is Glossy Paper, Glossy Film, or High Glossy Paper

- ❏ Normal
- ❏ Quality (Initial setting)
- ❏ Max Quality

Note	❏ When [Epson Preferred Color] is selected as [Color Correction], available print quality settings are different from above description. ❏ If you change the [Media Coating Type], the [Print Quality] will be automatically set to the initial setting suitable for the selected paper type.

Color Correction

- ❏ Epson Vivid Color (Initial setting)
- ❏ Epson Preferred Color
- ❏ ICM
- ❏ None

Spot Color Setting

No Spot Color (Initial setting)

Settings For Paper Handling After Print

- ❏ Cut (after printing last label)
- ❏ Cut (at specified label)
- ❏ Cut (after last page of collate page)
- ❏ Do not cut (stop at peel position)
- ❏ Do not cut (stop at cut position) (Initial setting)

❏ Do not cut (stop at the print end position)

Notification

❏ None (Initial setting)

❏ Beep at Cut

❏ Beep at Job End

❏ Beep at Collate End

Note	Regardless of the printer driver setting described above, the buzzer will not sound if the buzzer setting of the printer is disabled.

Pause

❏ None (Initial setting)

❏ Pause at Cut

❏ Pause at Job End

❏ Pause at Collate End

Media Detection…

The initial setting of [Media Source] and [Media Detection] will change depending on the settings of the printer.

Media Source

❏ Supply from Inside (Roll Paper)

❏ Supply from Outside (Fanfold Paper)

❏ Supply from Outside (Roll Paper)

Media Detection

❏ Gap detection

❏ Black mark detection

❏ No detection

Loading and Replacing Paper

This section describes how to load and replace paper. The procedure differs depending on whether to supply paper from inside or outside the printer. Videos that show the procedure are also available.

Click the URL below to view the videos.

<https://www.epson-biz.com/?prd=cw-c4k&inf=video>

Supply from Inside (Internal)	Supply from Outside (Rear Feed)
Paper is supplied from inside the printer. Set roll paper into the printer. 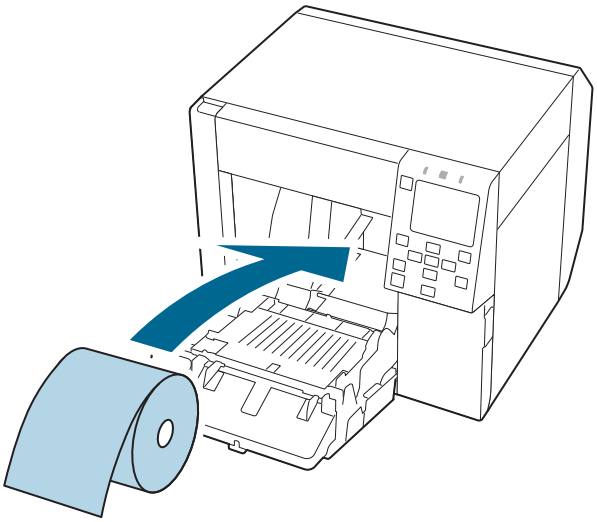	Paper is supplied from outside the printer. Place fanfold paper behind the printer. 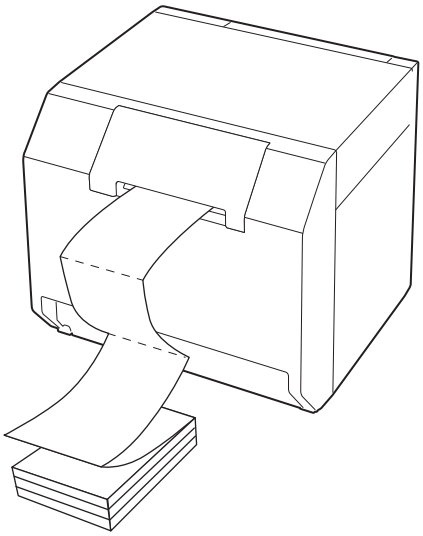

Important	❏ To supply roll paper from outside the printer, prepare an external paper feeder and paper rewinder by yourself. For more details, contact qualified service personnel for advice. ❏ When replacing paper with a different shape, form, or type of paper, change the paper settings either from the operation panel or on the printer driver before loading the paper. "Checking the Paper Information" on page 26 "Printer Driver Settings" on page 35

Loading Roll Paper

Caution	After turning on the printer, wait until the home screen is displayed, and then open the front cover. If you open the cover before the home screen is displayed, the printer may fail to load the paper correctly.

1 Turn the printer on.

2 Open the front cover.

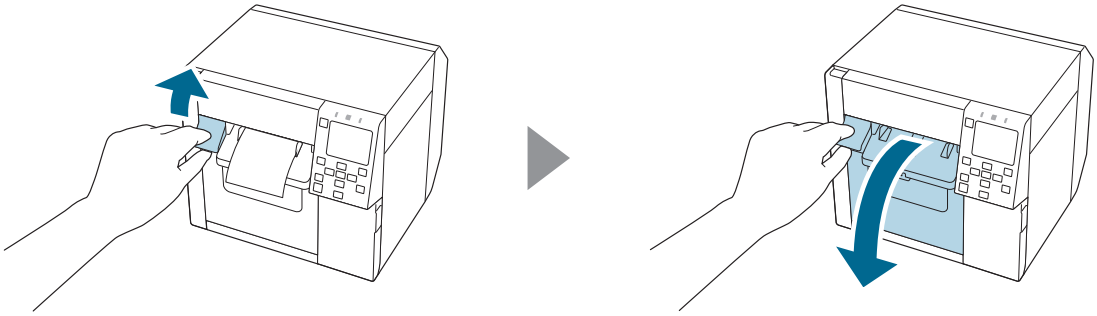

3 If the paper feed guide has been attached, remove it.

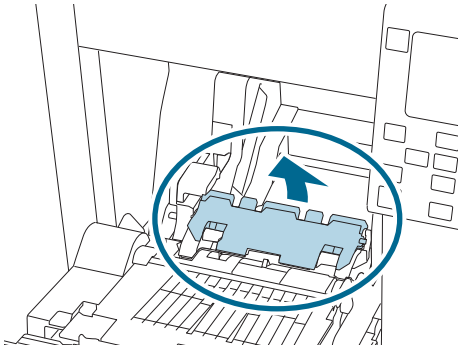

4 Raise the lock lever of the roll paper guides.

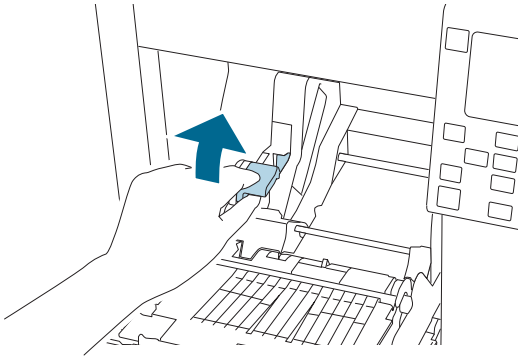

5 Slide the roll paper guides outward as far as they go.

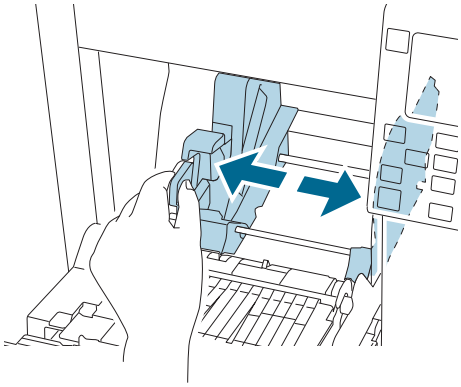

6 Lower the lock lever of the roll paper guides.

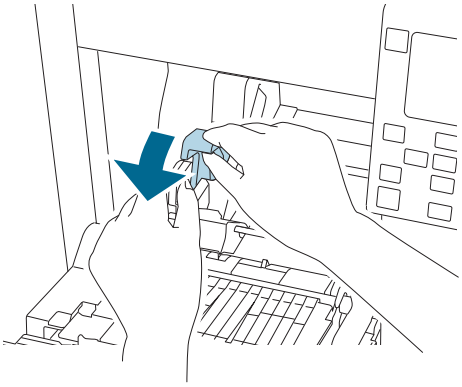

7 Insert paper with the printable side face up.

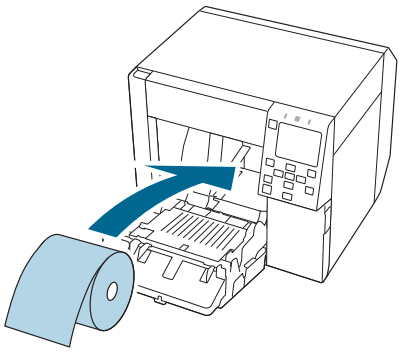

8 Raise the lock lever of the roll paper guides.

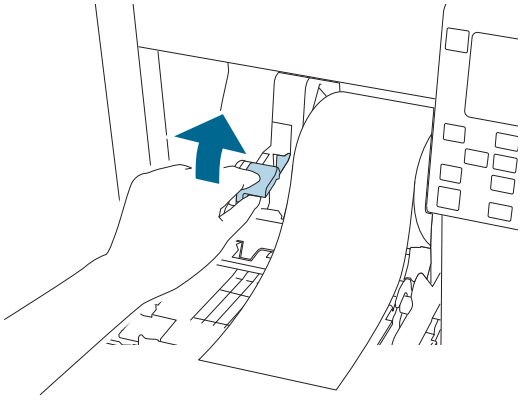

9 Slide the roll paper guides against the paper.

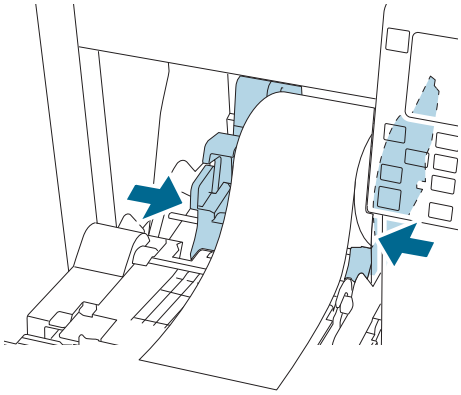

10 Lower the lock lever of the roll paper guides.

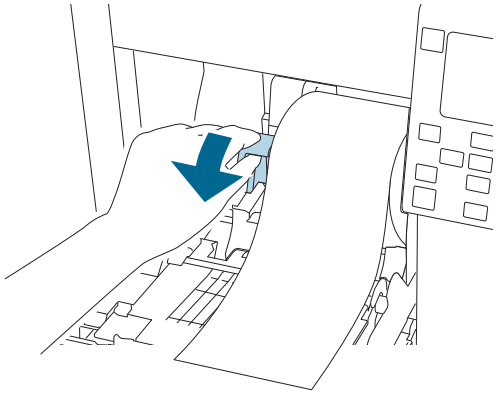

11 According to the paper width, open and/or close the platen shutters.

"Adjusting the Shutters" on page 51

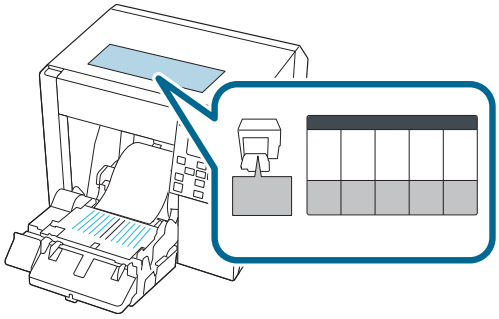

12 Lower the lock lever of the paper ejection guides.

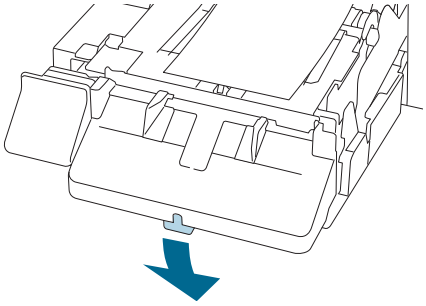

13 Slide the paper ejection guides outward.

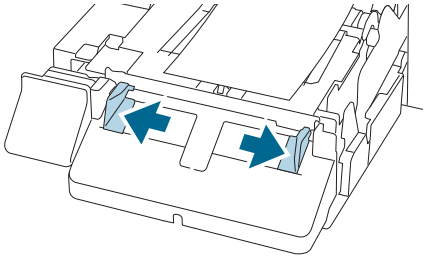

14 Pull out the paper as shown.

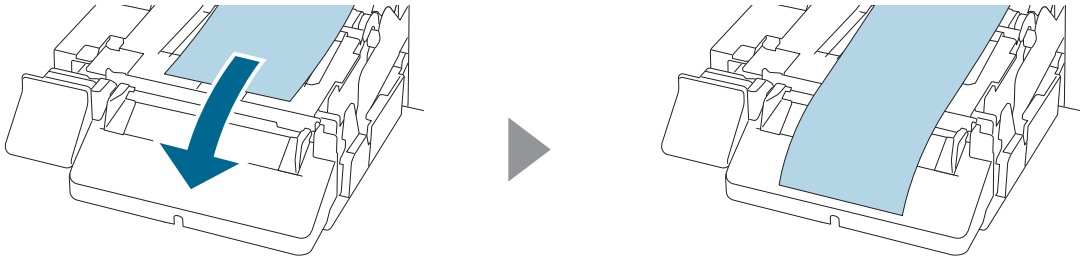

15 Hold down the paper by hand, and slide the roll paper guides against the paper.

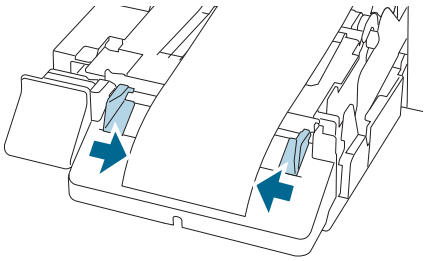

16 Raise the lock lever of the paper ejection guides until it clicks into place.

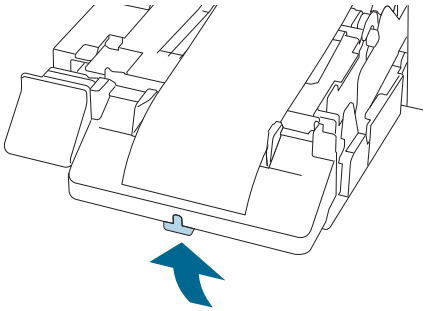

17 Pull out the leading edge of the roll paper, and then close the front cover.

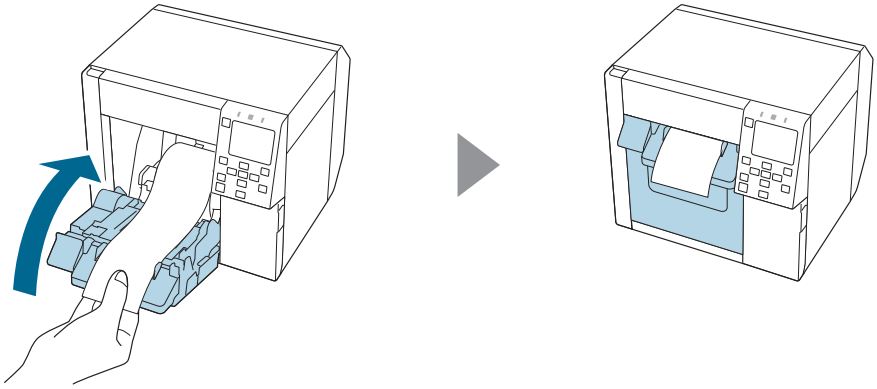

18 Press the ❚❚ (Pause) button.

Check that the printer is ready for printing by checking the home screen.

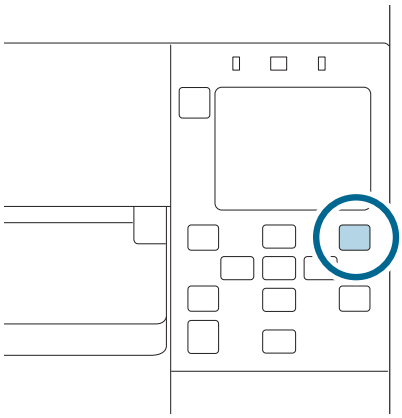

Loading Fanfold Paper

Caution	After turning on the printer, wait until the home screen is displayed, and then open the front cover. If you open the cover before the home screen is displayed, the printer may fail to load the paper correctly.

1 Turn the printer on.

2 Open the front cover.

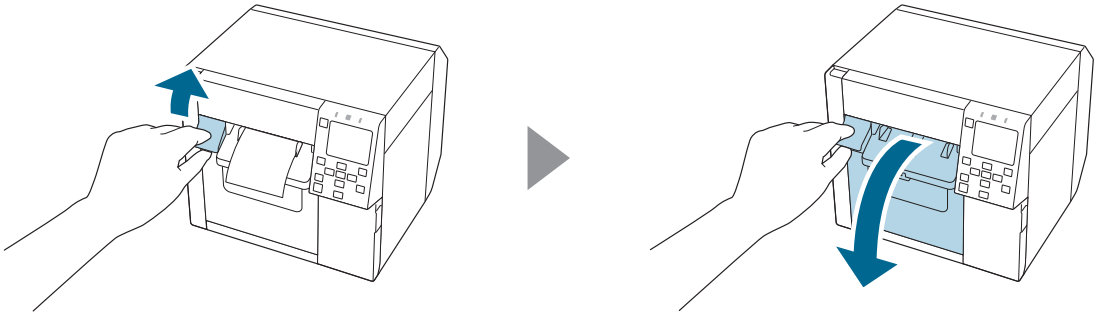

3 Open the rear cover.

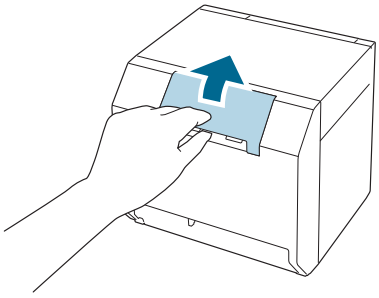

4 Remove the paper feed guide, and then close the rear cover.

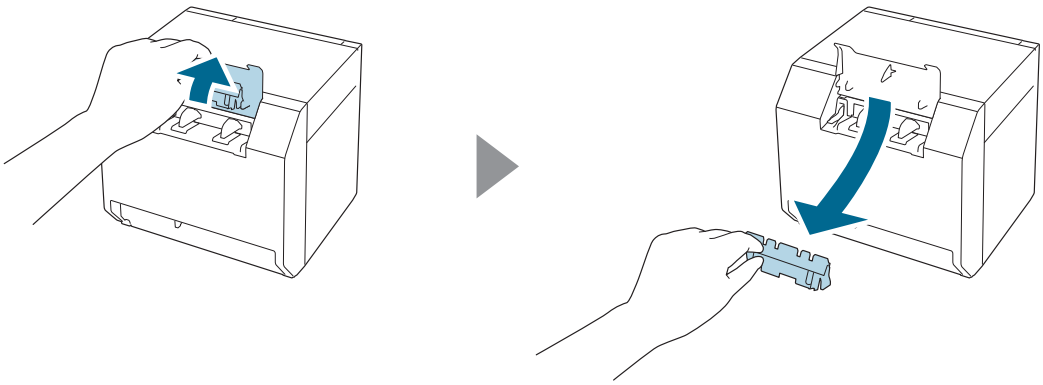

5 Attach the paper feed guide.

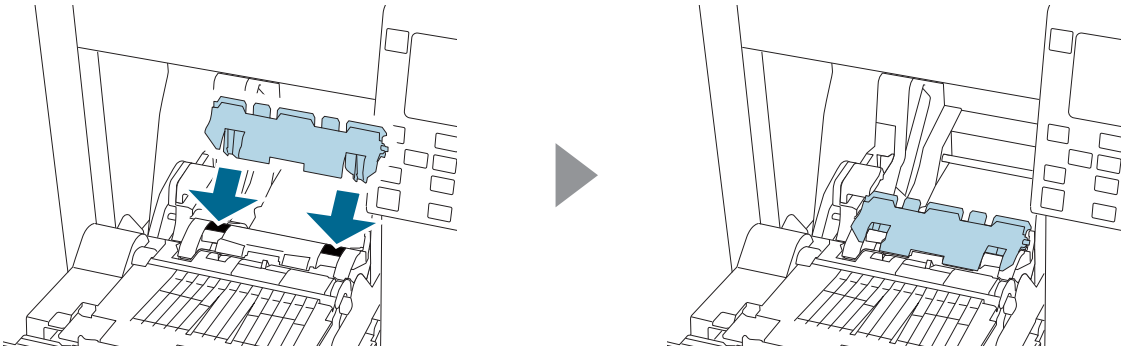

6 According to the paper width, open and/or close the platen shutters.

☞ "Adjusting the Shutters" on page 51

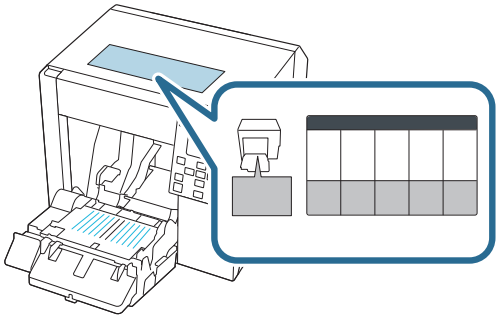

7 Lower the lock lever of the paper ejection guides.

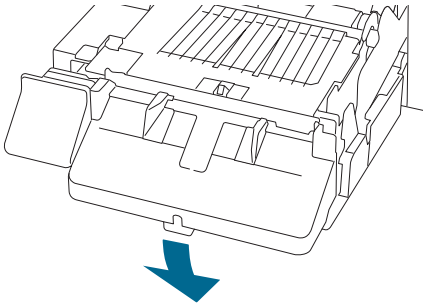

8 Slide the paper ejection guides outward as far as they go.

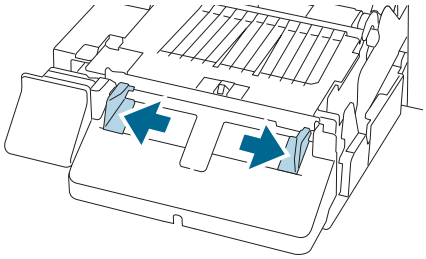

9 Raise the lock lever of the paper ejection guides until it clicks into place.

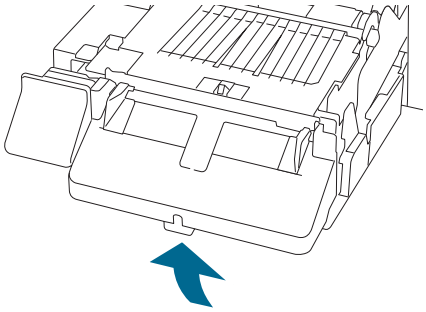

10 Close the front cover.

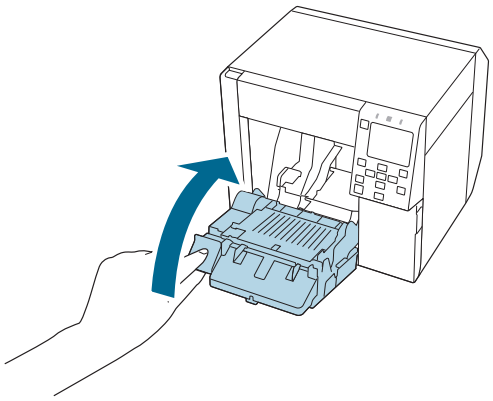

11 Open the rear cover.

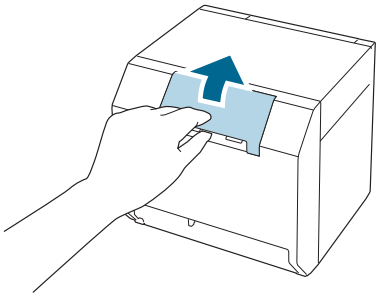

12 Raise the lock lever of the fanfold paper guides.

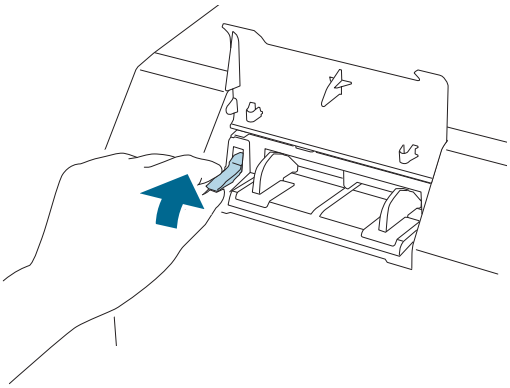

13 Place the fanfold paper behind the printer.

- ❏ Place the fanfold paper at least 40 mm away from the printer.
- ❏ Make sure the paper is vertical in relation to the paper feed slot.

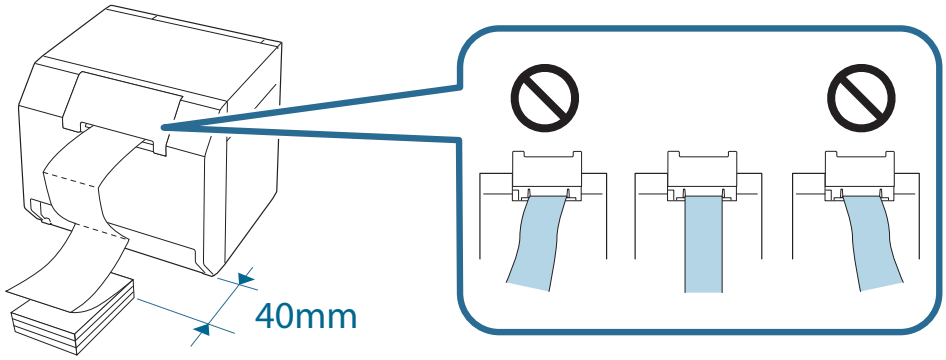

14 Slide the fanfold paper guides against the paper.

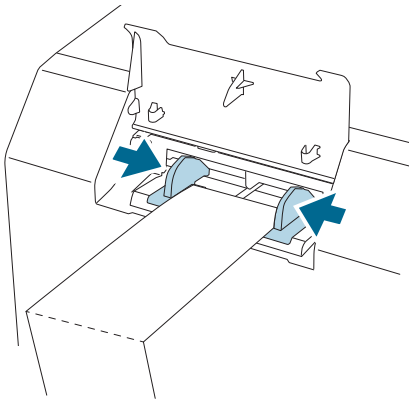

15 Lower the lock lever of the fanfold paper guides.

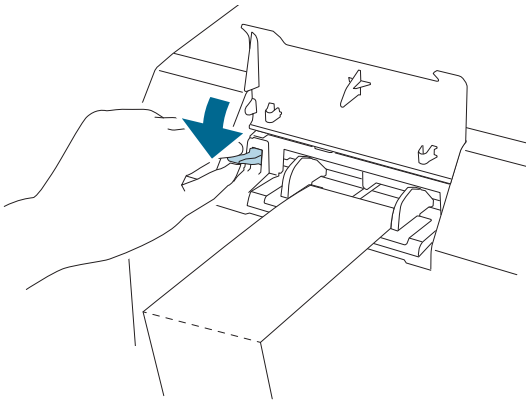

16 Insert the leading edge of the paper with the printable side face up.

When you insert about 100 mm of the paper, the paper is automatically fed further into the printer.

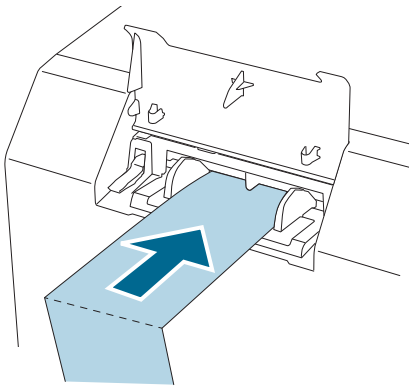

17 Close the rear cover.

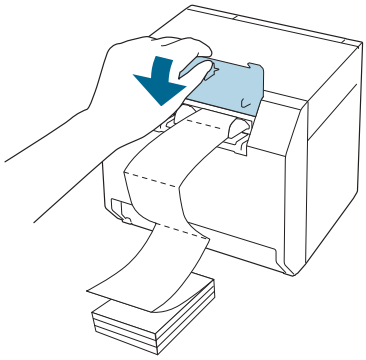

18 Press the ❚❚ (Pause) button.

Check that the printer is ready for printing by checking the home screen.

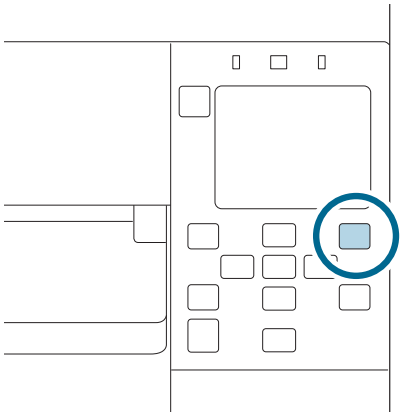

Adjusting the Shutters

Inside the front cover, there are shutters for adjusting paper suction for during printing.

The shutters need to be correctly opened/closed to match the paper width used. To open/close them, move them with a finger. Furthermore, the paper width can be checked on the label at the top of the main unit.

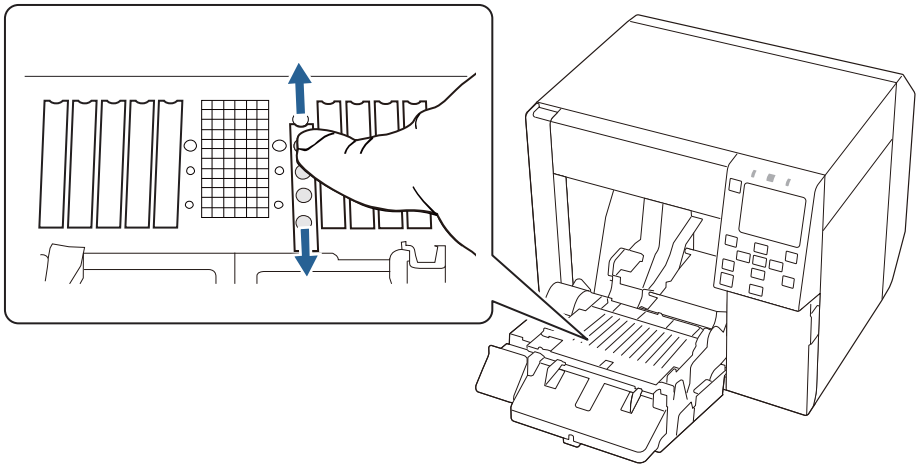

Caution	If the shutters are not correctly opened/closed, paper may be jammed or smudged with ink.

Paper width / Backing paper width	Shutter state
25.4 to 43.8 mm 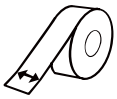	Close all the shutters. 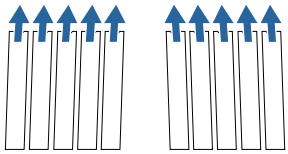
43.9 to 58.4 mm 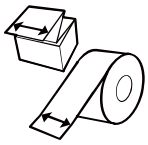	Open the innermost shutters. 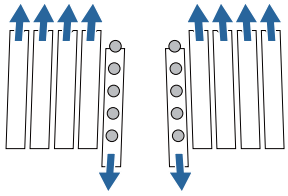
58.5 to 73.0 mm 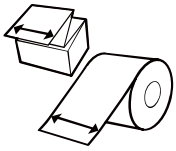	Open the inner four shutters. 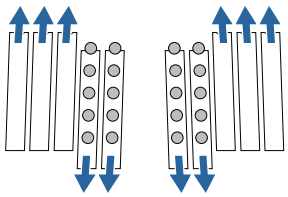

Basic Operation

Paper width / Backing paper width	Shutter state
73.1 to 87.6 mm 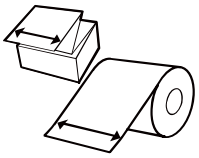	Open the inner six shutters. 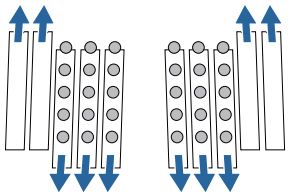
87.7 to 102.2 mm 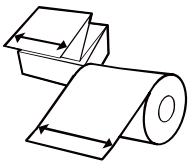	Open the inner eight shutters. 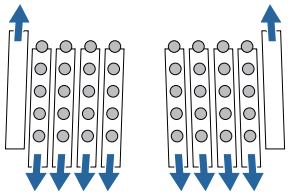
102.3 mm or longer 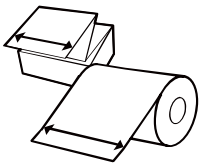	Open all the shutters. 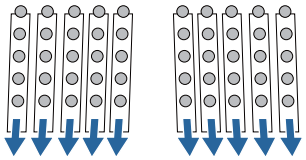

How to Remove Paper

1 Check that the printer has been turned on.

2 Open the front cover.

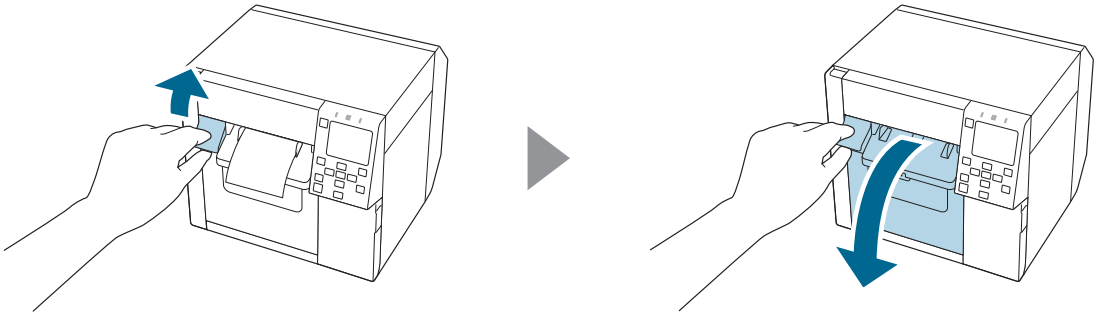

3 Remove roll paper or paper core from the printer.

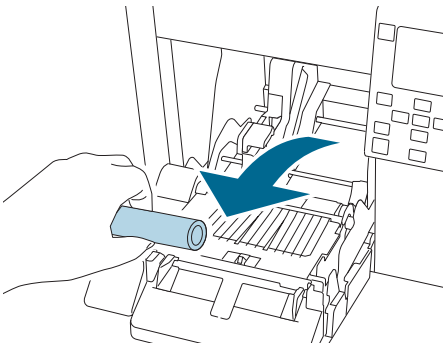

4 Close the front cover.

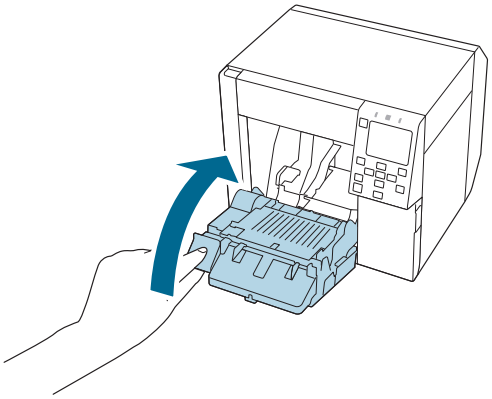

5 Press the ❚❚ (Pause) button.

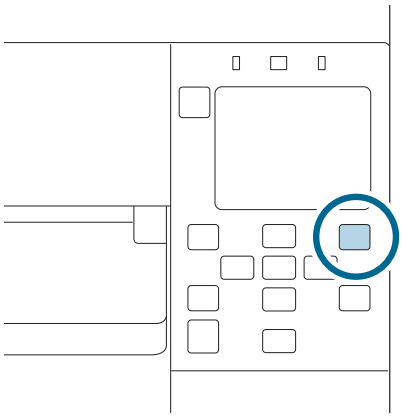

Removing the paper is now completed.

To load paper, see "Loading Roll Paper" on page 41 or "Loading Fanfold Paper" on page 46.

Maintenance

This chapter describes how to carry out maintenance of the printer.

Cleaning the Exterior

1. Turn the printer off and then disconnect the power cable from the outlet.

2. Wipe off any dirt with a dry cloth or cloth that has been slightly dampened.

   See the Technical Reference Guide for cleaning precautions.

Cleaning the Platen

If there is ink adhered to the platen, hands or paper may become dirty. Furthermore, if the holes in the platen become blocked by dirt, ink soiling inside the platen may occur.

Use the non-woven fabric or cotton swabs to clean the platen by following the steps below.

Caution	❏ Do not use water or alcohol. ❏ Take care not to change the position of the shutters on the platen. If the shutters are opened or closed incorrectly, paper may get jammed or be smudged with ink. ❏ Take care not to deform or damage the four sensors. 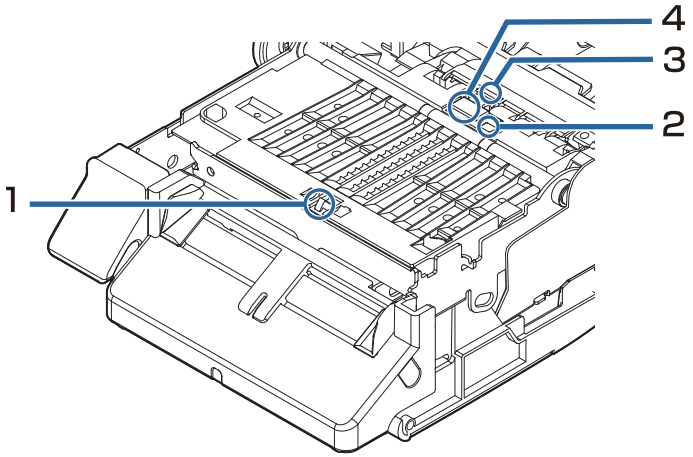

1 Turn the printer off and then disconnect the power cable from the outlet.

2 Open the front cover.

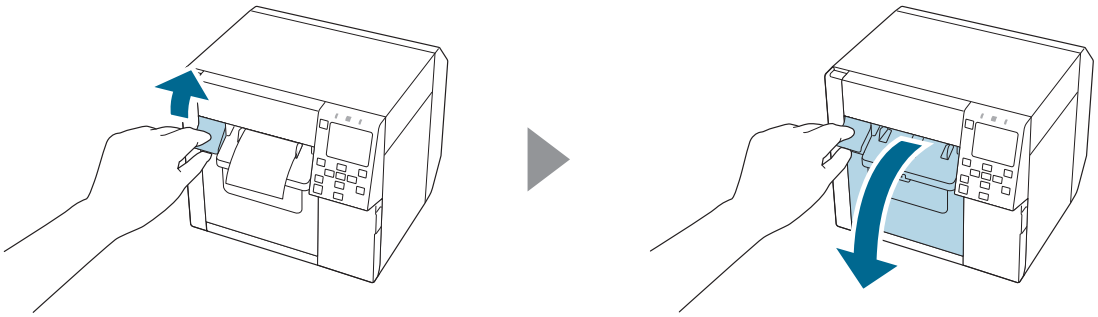

3 Remove the roll paper or fanfold paper.

4 Use the non-woven fabric for platen cleaning to clean the platen.

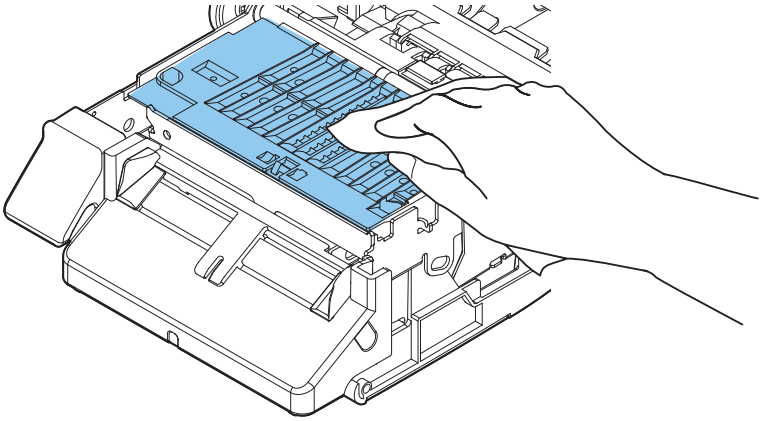

5 Use cotton swabs to clean the holes and around the holes. If the holes are blocked, be sure remove the dirt to unblock the holes.

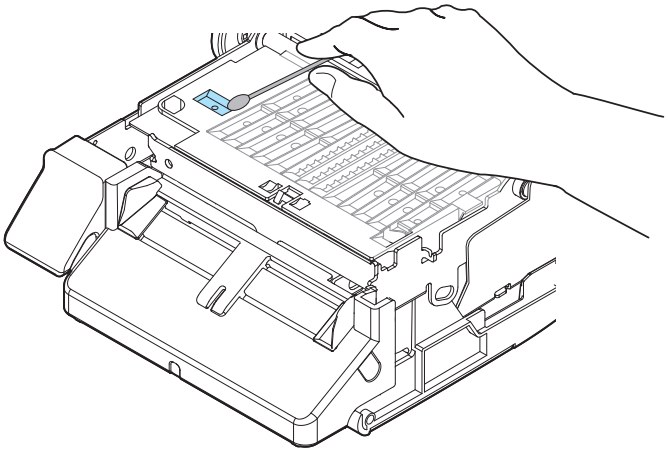

6 Close the front cover.

Cleaning the Auto Cutter

The fixed blade of the auto cutter may become unable to cut cleanly due to the adhesive of label paper adhering to it.

Perform cleaning by following the steps below.

1. Turn the printer off and then disconnect the power cable from the outlet.

2. Open the front cover and remove the paper.

3. Remove the adhesive adhered to the fixed blade of the auto cutter on the front cover side.

   Remove it with a cotton swab or the like dampened with alcohol.

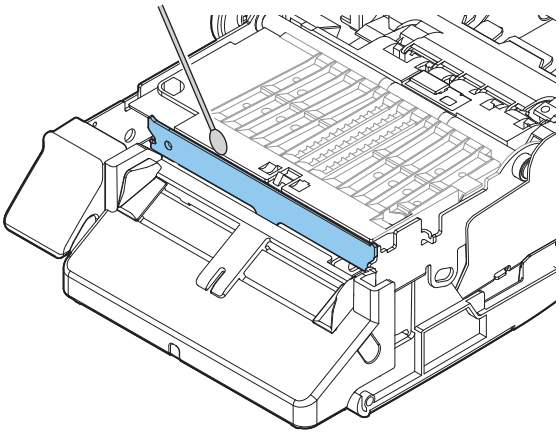

Caution	Do not directly touch the fixed blade of the auto cutter. Doing so may cause injury to a finger.

Cleaning the Print Head

If the nozzles are clogged, faint colors, banding, or unintended colors appear on printouts.

When such print quality problems occur, print nozzle check patterns and check for nozzle clogging.

Example of the nozzle check patterns with gloss black ink

Normal	Clogging
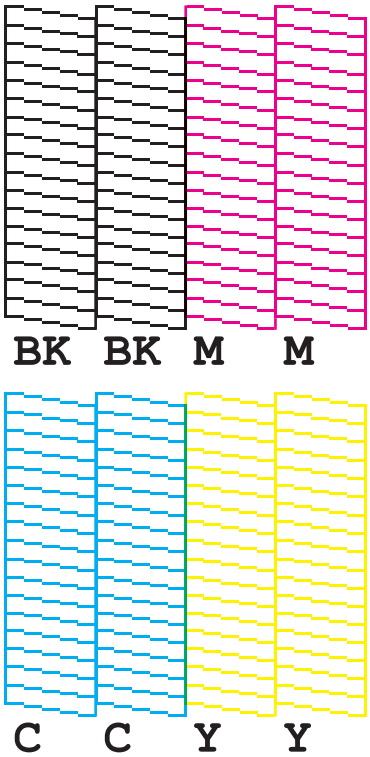	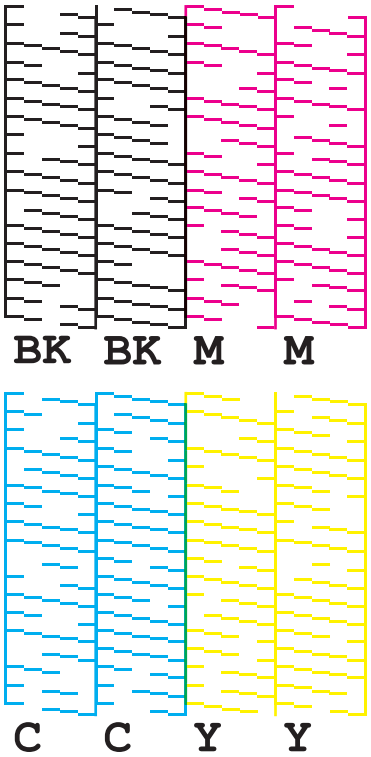

When the printed patterns show the nozzle clogging state, run a head cleaning.

Printing Nozzle Check Patterns

You can print the nozzle check patterns using the nozzle check function available from the operation panel or the printer driver.

Using the Operation Panel

[Menu] - [Maintenance] - [Print Head Nozzle Check]

Using the Printer Driver

Click [Nozzle Check] on the [Printer Utilities] tab.

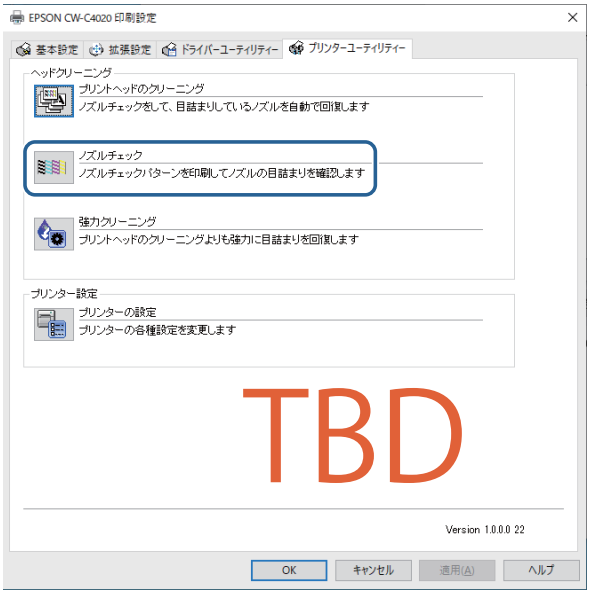

Head Cleaning

Important	❏ Do not turn off the power or open the covers during head cleaning. Doing so may cause printing malfunction. ❏ Do not run the head cleaning more than necessary. Ink is consumed because ink is discharged from the head to clean it. ❏ If there is not much ink remaining, head cleaning may not be possible. Replace the ink cartridges and then try again. ☞ "Replacing the Ink Cartridges" on page 29

Using the Operation Panel

[Menu] - [Maintenance] - [Print Head Cleaning]

[Menu] - [Maintenance] - [Power Cleaning]

Using the Printer Driver

Click [Print Head Cleaning] or [Power Cleaning] on the [Printer Utilities] window.

Maintenance

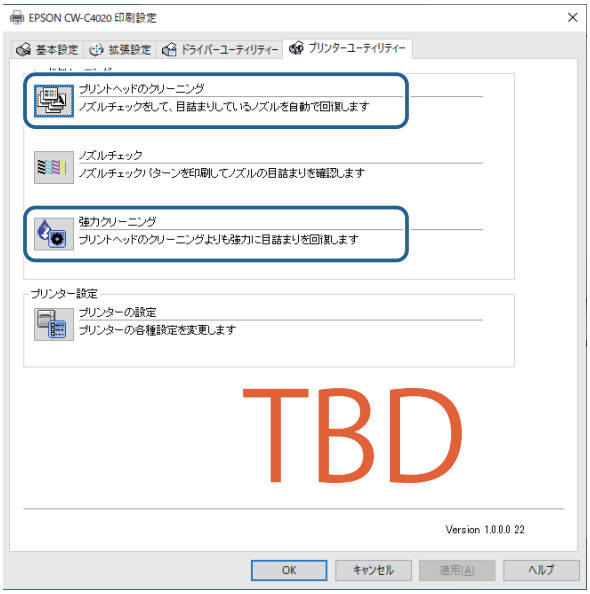

Troubleshooting

This chapter describes how to resolve problems. For troubleshooting information that is not described here, see the CW-C4000 Series Technical Reference Guide.

A Message is Displayed on the Operation Panel

Message	Solution and Reference
Information Paper feed error. Load the paper or change the media source setting.	Use paper that matches the [Media Source] and [Media Form] settings. Or change the [Media Source] and [Media Form] settings to match them with the loaded paper. "Printer Driver Settings" on page 35
Information Cannot detect the paper specified by the Media Detect setting. Load paper that matches the setting or change the setting.	Use paper that matches the [Media Detect] settings. Or change the [Media Detect] settings to match them with the loaded paper. "Printer Driver Settings" on page 35
(On the home screen) Load paper.	Load paper. "Loading and Replacing Paper" on page 40
Information The size of the loaded paper is incorrect. Replace the paper.	Load media that matches the print area size. Or change the print area to match it with the media size. "Loading and Replacing Paper" on page 40
Information The roll paper is not loaded.	Load roll paper. "Loading and Replacing Paper" on page 40
Information The fanfold paper is not loaded.	Load fanfold paper. "Loading and Replacing Paper" on page 40
Information Paper jam.	Remove the jammed paper and then load paper. "Roll Paper is Jammed" on page 70 "Fanfold Paper is Jammed" on page 72
Information The paper is not loaded correctly. Reload the paper.	Remove the paper, and then load the paper again. "How to Remove Paper" on page 53 "Loading and Replacing Paper" on page 40
Information Calibration failed. Press the OK button. Then reload or replace the paper.	Make sure that the paper loaded in the printer matches the paper detection method (gap or black mark), and reset the paper. "Loading and Replacing Paper" on page 40 Calibration is impossible if Gap Between Labels exceeds 6 mm. "Supported Paper" on page 15 If the error still occurs, the detector cannot handle the paper. Replace the paper.

Troubleshooting

Message	Solution and Reference
Information The paper has already been cut and cannot be cut.	This error occurs when you press the Cut button at the position where the paper is already cut. Feed the paper by printing or pressing the Feed button to enable the Cut button.
Maintenance Error The ink cartridge is not installed correctly.	Install an ink cartridge with a sufficient amount of ink remaining. ☞ "How to Replace the Ink Cartridges" on page 29
(On the home screen, an exclamation mark on the ink levels)	Prepare a new ink cartridge to be replaced with the low-ink-level cartridge. If you continue to use the low-ink-level cartridge, you may be required to replace it during printing. If you replace the cartridge during printing, you may see a difference in color between colors printed by the old cartridge and colors printed by the new one due to a difference in ink drying status. If it is not acceptable for you, replace the ink cartridge with a new one before starting printing. ☞ "How to Replace the Ink Cartridges" on page 29 The removed ink cartridge can be installed again and used until you are prompted to replace it.
Information You need to replace the following ink cartridge(s).	Install an ink cartridge with a sufficient amount of ink remaining. ☞ "How to Replace the Ink Cartridges" on page 29
Maintenance Error Cannot recognize the ink cartridge. Select "Next" to clear the error.	Reinstall the ink cartridge. If the error reoccurs, replace the ink cartridge with a new one. ☞ "How to Replace the Ink Cartridges" on page 29
Information You have not installed genuine Epson ink cartridges.	For the best performance of the printer, it is recommended to use genuine Epson ink cartridges. Use of non-genuine Epson ink cartridges can adversely affect the printer and print quality and prevent the printer from realizing its maximum performance. Epson cannot guarantee the quality and reliability of non-genuine Epson products. Repairs for any damage or breakdown of this product due to the use of non-genuine Epson products will not be free of charge even if the warranty period is still valid.
Information These ink cartridges are not compatible.	Because the installed ink cartridges are not the ones for this printer, an error such as a cartridge detection error may occur.
Maintenance Error Maintenance Box not installed. Product Number: SJMB4000	Install a new maintenance box. ☞ "How to Replace the Maintenance Box" on page 32
Maintenance Error Cannot recognize the Maintenance Box. Product Number: SJMB4000	Reinstall the maintenance box. If the error reoccurs, replace the maintenance box with a new one. ☞ "How to Replace the Maintenance Box" on page 32

Troubleshooting

Message	Solution and Reference
(On the home screen) The Maintenance Box is nearing end of its service life.	Prepare a new maintenance box to be replaced with the near-full maintenance box. When a message saying "The Maintenance Box is at the end of its service life. You need to replace it." is displayed, replace the maintenance box. "How to Replace the Maintenance Box" on page 32
Maintenance Error The Maintenance Box is at the end of its service life. You need to replace it. Product Number: SJMB4000	Replace the maintenance box with a new one. "How to Replace the Maintenance Box" on page 32
Information Memory Full. Document was not printed.	Contact your system administrator and delete unnecessary files.
Printer Error Turn on the printer again. See your documentation for more details. XXXXXX	1. Turn off the printer. 2. Check that there is no paper jam or foreign materials near the ejection slot. 3. Turn the printer on. If the printer error still occurs, contact qualified service personnel for advice. When contacting, tell the person the "XXXXXXXX" (a 6- or 8-digit alphanumeric code).
Information Cannot start cleaning because ink is low. Printer features except cleaning are available.	When running the cleaning, install ink cartridges with a sufficient amount of ink remaining. "How to Replace the Ink Cartridges" on page 29
Information Paused The print quality may decrease because the nozzles are clogged.	The print quality may decrease because the nozzles are clogged. If it is not acceptable, run a print head cleaning. "Cleaning the Print Head" on page 59

Troubleshooting

Message	Solution and Reference
Error The connection between your network and the printer is unstable. You may be able to solve this problem by disabling the IEEE802.3az (Energy Efficient Ethernet) function. See your documentation for more details.	When connecting to a wired LAN using a device that supports IEEE802.3az (Energy Efficient Ethernet), the connection may become unstable, the connection may not be possible, or the communication speed may slow down. Follow the steps below to disable the IEEE802.3az function on your computer and printer. 1. Disconnect the LAN cables from the computer and printer respectively. 2. If the IEEE802.3az function has been enabled on your computer, disable it. 3. Connect the computer and printer directly with a LAN cable. 4. On the printer, select [Menu] - [General Settings] - [Network Settings] - [Connection Check] to check the IP address of the printer. 5. Start WebConfig on the computer. Start your web browser and enter the IP address of the printer. 6. Select the [Network Settings] tab, then [Ethernet]. 7. Set [IEEE 802.3az] to [Off]. 8. Click [Next]. 9. Click [Apply]. 10. Disconnect the LAN cable from the computer and printer. 11. If you disabled IEEE802.3az on your computer in step 2, enable it. 12. Connect the LAN cables you disconnected in step 1 to the computer and printer. If the problem still occurs, a device other than the printer may be causing the problem.

Problems with Print Quality

Horizontal White Banding

Cause	Solution and Reference
The nozzles are clogging.	Print the nozzle check patterns to check the nozzles for clogging. ☞ "Printing Nozzle Check Patterns" on page 59 If the nozzles are clogging, run a print head cleaning. ☞ "Cleaning the Print Head" on page 59

White or Black Banding

Cause	Solution and Reference
The paper is not loaded correctly.	Reload the paper. ☞ "Loading and Replacing Paper" on page 40
The paper being used and the Media Coating Type setting differ.	Check the paper being used and the Media Coating Type setting of the printer driver. ☞ "Printer Driver Settings" on page 35

White or Black Banding near the Edges

Cause	Solution and Reference
The outside shutters on the platen, which are not needed to be opened for the paper, are open.	Air flow from the outside shutters adversely affect the printing operation and may cause white banding on printouts. Set the shutters on the platen according to the instructions on the label attached to the printer. ☞ "Adjusting the Shutters" on page 51

Printed Colors Are Wrong

Cause	Solution and Reference
If the printer is moved after initial charging, the specified colors may not be output (colors may be mixed) due to vibrations and impacts.	Run a head cleaning and check that colors are no longer mixed. ☞ "Cleaning the Print Head" on page 59

Printed Characters Look Blurred

Cause	Solution and Reference
The outside shutters on the platen, which are not needed to be opened for the paper, are open.	Air flow from the outside shutters adversely affect the printing operation and may cause blurred print. Set the shutters on the platen according to the instructions on the label attached to the printer. "Adjusting the Shutters" on page 51

Print Position Shifts

Cause	Solution and Reference
The edge guide is not set along the paper edge.	Check that the edge guide is properly set at the paper width position. "Loading and Replacing Paper" on page 40
The paper is not loaded centrally.	If the paper is offset from the center when loaded, print position may be laterally shifted at the beginning of printing. Use the paper guides to load the paper centrally or feed the paper before starting printing.
The trailing edge of the paper is approaching.	When the trailing edge of the paper approaches, print position may be laterally shifted, or blurred print may occur. Replace the paper with a new one.

Paper is Smeared or Smudged with Ink

Cause	Solution and Reference
The paper being used and the Media Coating Type setting differ.	Check the paper being used and the Media Coating Type setting of the printer driver. "Printer Driver Settings" on page 35
If foreign matter is adhered to the head, the paper may be smeared with ink.	Run a print head cleaning. "Cleaning the Print Head" on page 59
The paper width and the shutters on the platen do not match.	If the paper width and shutters on the platen do not match, rising up of the paper may cause the paper and print head to rub against each other, leading to the paper becoming dirty. Set the shutters on the platen according to the instructions on the label attached to the printer. "Adjusting the Shutters" on page 51

Paper is Fed and Ejected, and an Error Occurs

Cause	Solution and Reference
The paper being used differs from that of Media detection settings.	Check the paper being used and Media detection settings of the printer. "Printer Driver Settings" on page 35

Margins are Generated on Printed Labels

Cause	Solution and Reference
This is normal, and not a failure of the printer.	If you do not enable [Borderless Printing] on the [Options] tab of the printer driver, 1.5 mm margin at the top, bottom, left, and right will be created narrowing the printable area on the label. If you wish to set the entire area of the label size as the printable area, enable [Borderless Printing]. When [Borderless Printing] is enabled, edges of label image may be printed on the backing paper, so create margins of 1.5 mm at the top, bottom, left, and right in the label image data.

Margins of Label Are Large

Cause	Solution and Reference
The margin setting is too large.	Check the margin settings in the application and then set the top, bottom, left, and right margins to 1.5 mm.

Printing from a computer is impossible or becomes suddenly impossible

Checking Whether the Printer Driver Is Installed

Check whether or not the required software and applications are installed on the computer.

To print with this printer, a printer driver is required. Check whether or not the printer driver is installed by following the steps below.

1. Display Devices and Printers on the computer.
2. Check that the printer name is displayed.

   If not, the printer driver is not installed.
3. Install the printer driver.

   "Downloading the Latest Version" on page 4

The printer does not turn on

Check that the power cable is connected to the printer and outlet properly.

"Connectors" on page 22

Print Job is Canceled on PC but "Printing" Message on Printer Does Not Disappear

If you cancel printing in printer queue on the computer, it may cause the print data to break up and "Printing" may be kept displayed on the operation panel of the printer.

To cancel the status, press the (cancel) button on the operation panel, and then select [All label formats].

Roll Paper is Jammed

1 Open the front cover.

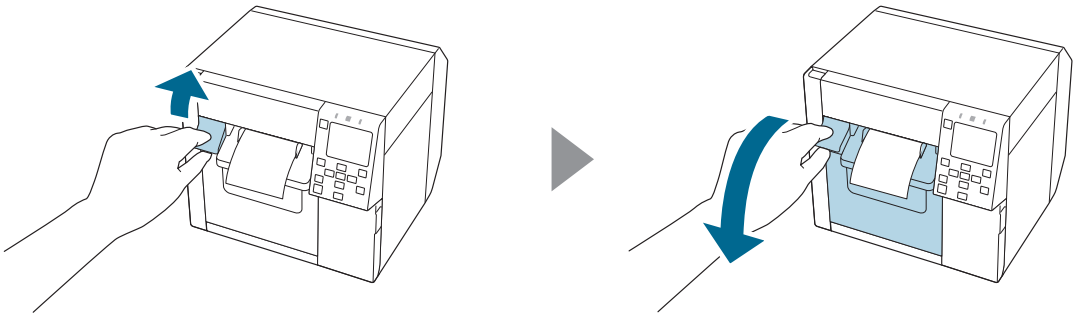

2 Remove the jammed paper.

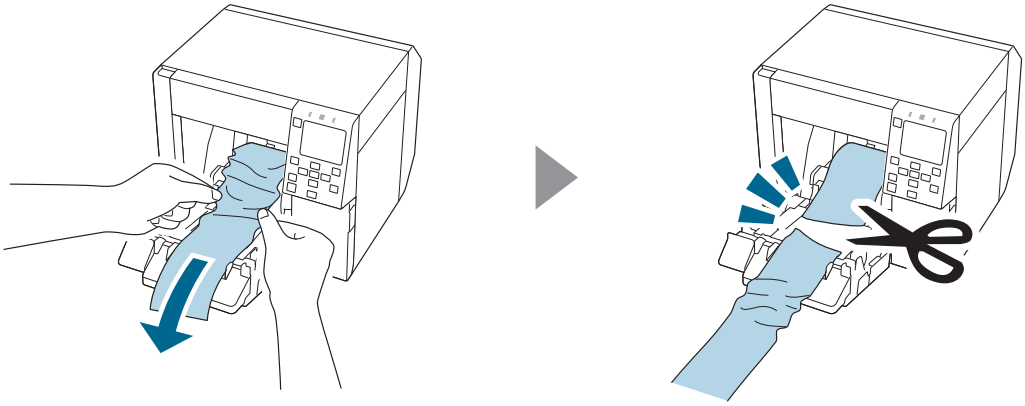

3 Pull out the leading edge of the roll paper, and then close the front cover.

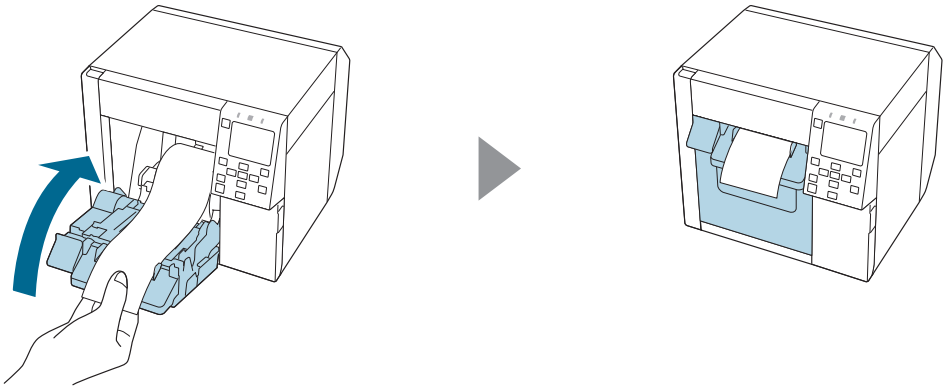

4 Press the ❚❚ (Pause) button.

Check that the printer is ready for printing by checking the home screen.

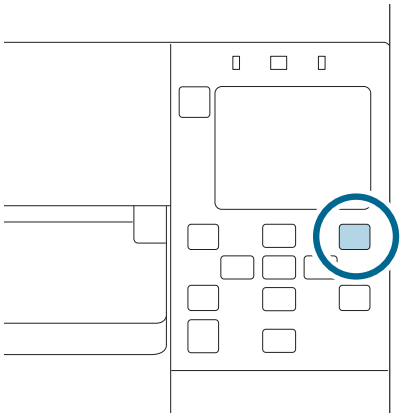

If the problem of paper jam cannot be resolved even after following the steps above, refer to the CW-C4000 Series Technical Reference Guide.

Note	After removing jammed paper, make sure that there is no labels or adhesive left inside the printer. If you use the printer without removing them, it leads to frequent paper jams, or may cause poor print quality. If paper jam occurs frequently, clean the inside of the printer. ☞ "Maintenance" on page 55

Fanfold Paper is Jammed

1 Open the front cover.

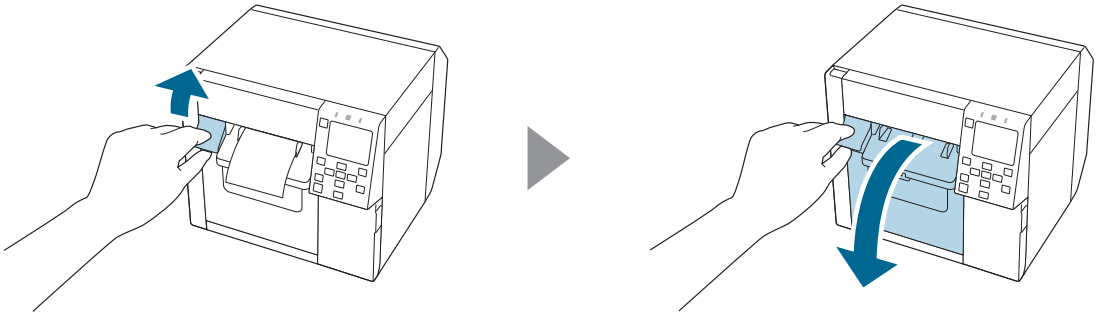

2 Cut out the jammed paper.

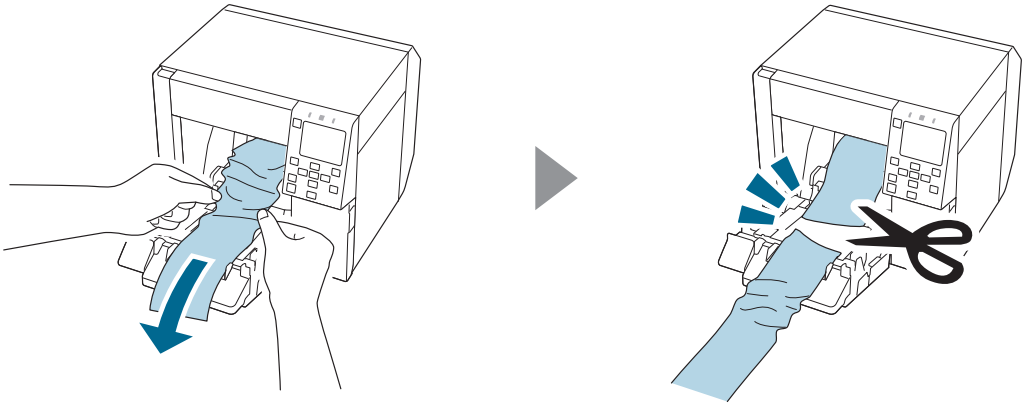

3 Open the rear cover and then remove the jammed paper.

4 Close the rear cover.

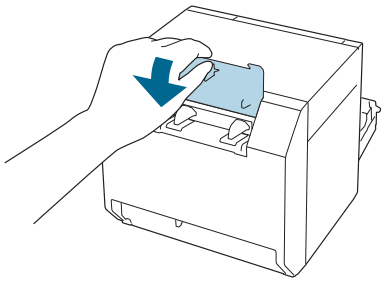

5 Close the front cover.

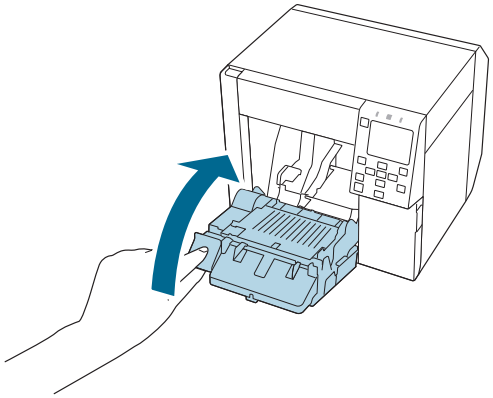

6 Press the ❚❚ (Pause) button.

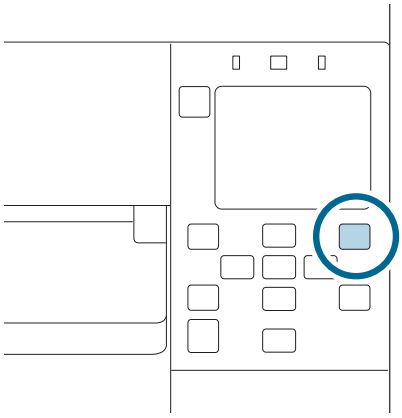

If the problem of paper jam cannot be resolved even after following the steps above, refer to the CW-C4000 Series Technical Reference Guide.

Note	After removing jammed paper, make sure that there is no labels or adhesive left inside the printer. If you use the printer without removing them, it leads to frequent paper jams, or may cause poor print quality. If paper jam occurs frequently, clean the inside of the printer. ☞ "Maintenance" on page 55

Specifications

This chapter describes the specifications of the printer.

Product Specifications

Item			Specifications
Printing method			Serial inkjet, dot matrix method Four-color printing
Paper feed method			Forward and reverse friction feed
Cutting type of the auto cutter			Full cut (cuts paper completely)
Print resolution			300 × 600 dpi 600 × 600 dpi 600 × 1200 dpi 1200 × 1200 dpi
Print speed	Print quality setting: Max Speed 300 × 600 dpi (width × height)	Printing width: 25.4 mm	124 mm/s
		Printing width: 101.6 mm	100 mm/s
	Print quality setting: Speed 600 × 600 dpi (width × height)	Printing width: 25.4 mm	111 mm/s
		Printing width: 101.6 mm	70 mm/s
	Print quality setting: Normal 600 × 600 dpi (width × height)	Printing width: 25.4 mm	63 mm/s
		Printing width: 101.6 mm	48 mm/s
	Print quality setting: Quality 600 × 1200 dpi (width × height)	Printing width: 25.4 mm	27 mm/s
		Printing width: 101.6 mm	18 mm/s
	Print quality setting: Max Quality 1200 × 1200 dpi (width × height)	Printing width: 25.4 mm	11 mm/s
		Printing width: 101.6 mm	8 mm/s
Interface		Wired LAN	1000BASE-T/100BASE-TX/10BASE-T
		Wireless LAN	Available by connecting the optional Wireless LAN Unit.
		USB	USB2.0 High-Speed

Specifications

Item	Specifications
Weight	Approx. 13 kg

Electrical Specifications

Item		Specifications
Power supply		Dedicated AC adapter (AC ADAPTER, K1, Model number: M248B)
Rated voltage		42 V DC
Rated current		1.38 A
Power consumption	Operating*	Approx. 28.2 W on average
	Standby	Approx. 2.6 W on average
	Power off	Approx. 0.13 W on average

*Based on Epson evaluation conditions

Overall Dimensions

Item	Specifications
Height	285 mm
Width	310 mm
Depth	283 mm

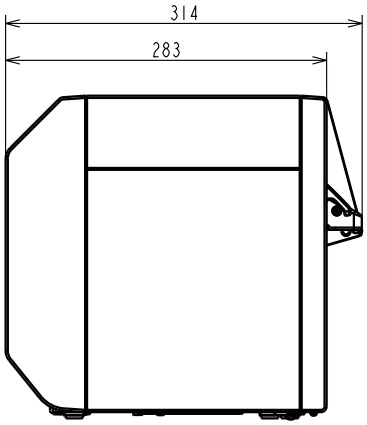

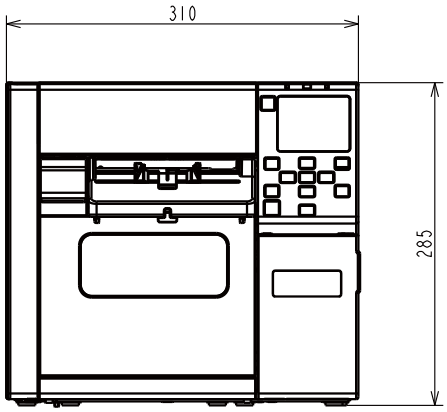

Unit: mm

With OT-PT40 Installed

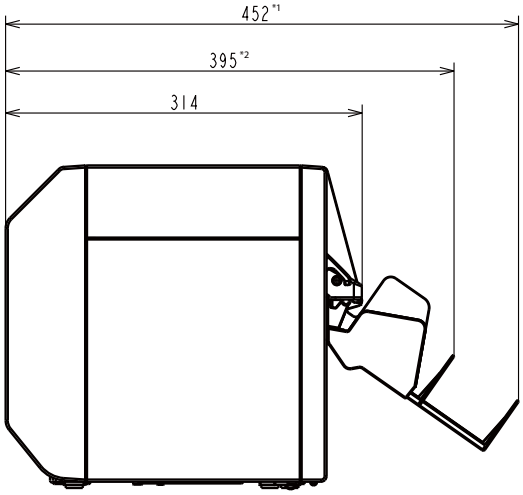

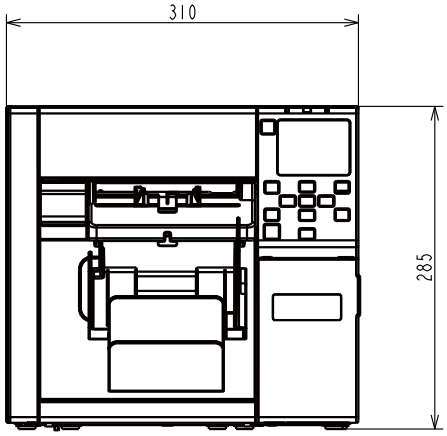

Unit: mm

*1: When paper ejection tray is extended

*2: When paper ejection tray is retracted

Environmental Specifications

Temperature /humidity	Printing	5 to 35°C, 20 to 80%RH without condensation (the blue-colored range in the graph) 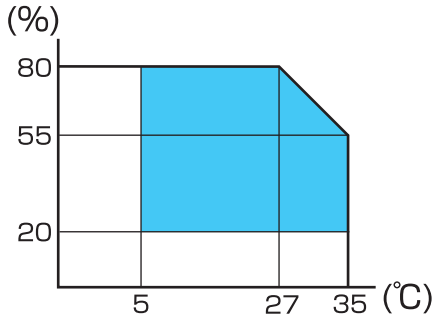 		
	Barcode printing	15 to 35°C, 20 to 85% RH without condensation		
	Storage	When packed (Ink not charged)		-20 to 60°C, 5 to 85% RH without condensation (When -20°C or 60°C, within 120 hours)
		With ink charged	Gloss black ink	-15 to 40°C (Within 6 months at 0 to 25°C) (Within 1 month at 40°C)
			Matte black ink	-10 to 40°C (Within 6 months at 0 to 25°C) (Within 1 month at 40°C)
Elevation		0 to 3000 m		
Noise		Approx. 58 dB Based on Epson evaluation conditions.		

Paper Specifications

The following types of paper can be used with the printer.

Paper Type	When using Matte Ink	When using Gloss Ink
Plain paper	✓	-
Matte paper	✓	✓
Texture Paper	✓	-
Synthetic	✓	✓
Wristband paper	✓	-
Glossy paper	-	✓
Glossy Film	-	✓
High Glossy Paper	-	✓

Ink Cartridge

Model number	CW-C4000u	SJIC41P-BK, SJIC41P-MK, SJIC41P-C, SJIC41P-M, SJIC41P-Y
	CW-C4000e	SJIC42P-BK, SJIC42P-MK, SJIC42P-C, SJIC42P-M, SJIC42P-Y
	CW-C4010	SJIC42P-BK, SJIC42P-MK, SJIC42P-C, SJIC42P-M, SJIC42P-Y
	CW-C4020	SJIC43P-BK, SJIC43P-MK, SJIC43P-C, SJIC43P-M, SJIC43P-Y
	CW-C4030	SJIC44P-BK, SJIC44P-MK, SJIC44P-C, SJIC44P-M, SJIC44P-Y
	CW-C4040	SJIC45P-BK, SJIC45P-MK, SJIC45P-C, SJIC45P-M, SJIC45P-Y
	CW-C4050	SJIC46P-BK, SJIC46P-MK, SJIC46P-C, SJIC46P-M, SJIC46P-Y
Type		4 individual color cartridges
Ink colors		Black (gloss black, matte black), cyan, magenta, yellow
Ink type		Pigmented ink
Expiration date		6 months after installation in the printer, 3 years after manufacture including the period of use
Storage temperature	Transporting (without unpacking)	-20 to 60°C (within 5 days when 60°C)
	Storage (without unpacking)	-20 to 40°C (within 1 month when 40°C)
	Installed	-20 to 40°C (within 1 month when 40°C)

Maintenance Box

Model number		SJMB4000
Type		Maintenance box with integrated waste ink absorbing material
Storage temperature	Transporting (without unpacking)	-20 to 60°C (within 5 days when 60°C)
	Storage (without unpacking)	-20 to 40°C (within 1 month when 40°C)
	Installed	-20 to 40°C (within 1 month when 40°C)

Appendix

Consumables and Options

Consumables and options for this product are available. They can be purchased from sales representatives.

Visit the URL below for more details.

<https://www.epson-biz.com/>

Ink Cartridge

Four ink cartridge colors are used. Black ink can be selected from gloss black and matte black.*

For the ink cartridges that can be used with this product, refer to "Ink Cartridge" on page 80.

* Some models of the printer cannot use matte black ink.

Genuine Ink Cartridges Recommended

- For the best performance of the printer, it is recommended to use genuine Epson ink cartridges. Use of non-genuine Epson ink cartridges can adversely affect the printer and print quality and prevent the printer from realizing its maximum performance. Epson cannot guarantee the quality and reliability of non-genuine Epson products. Repairs for any damage or breakdown of this product due to the use of non-genuine Epson products will not be free of charge even if the warranty period is still valid.

- Color adjustment of the product is based on the use of genuine Epson ink cartridges. Use of non-genuine ink cartridges may result in reduced print quality. Epson recommends the use of genuine Epson ink cartridges.

Disposal of Ink Cartridges

Dispose the ink cartridges properly following the law or regulations of your country and area.

Maintenance Box

The maintenance box is a box used to collect waste ink. The maintenance box available for this product is:

Model number: SJMB4000

Genuine Maintenance Box Recommended

For the best performance of the printer, it is recommended to use a genuine Epson maintenance box. Use of a non-genuine Epson maintenance box can adversely affect the printer and prevent the printer from realizing its maximum performance. Repairs for any damage or breakdown of this product due to the use of non-genuine Epson products will not be free of charge even if the warranty period is still valid. Epson cannot guarantee the quality and reliability of non-genuine Epson products.

Disposal of Maintenance Box

Dispose the ink cartridges properly following the law or regulations of your country and area.

OT-PT40

OT-PT40 is an paper ejection tray that allows you to temporarily collect printed labels.

OT-PT40 can hold the paper of the following sizes.

Maximum paper size: 105 x 148 mm (width x length)

Minimum paper size: 76 x 54 mm (width x length)

Note	❏ In the case of roll paper, the paper is curled so if multiple labels or sheets are printed and ejected, they may overflow the tray. ❏ Depending on the printer model, OT-PT40 comes with the printer.

Attach the tray by following the steps below.

1 Attach the tray by hooking it onto the hooks on the under side of the paper ejection guides.

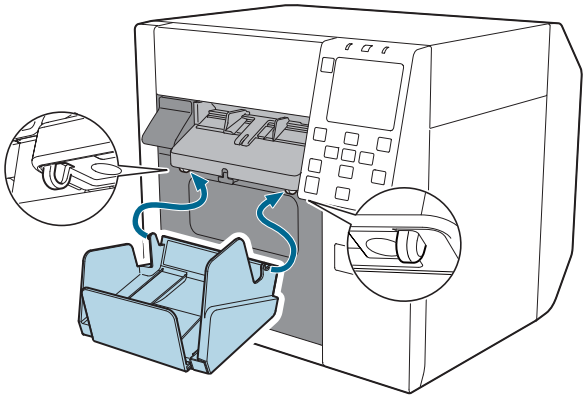

2 Pull the lever at the bottom right of the OT-PT40 to release the lock.

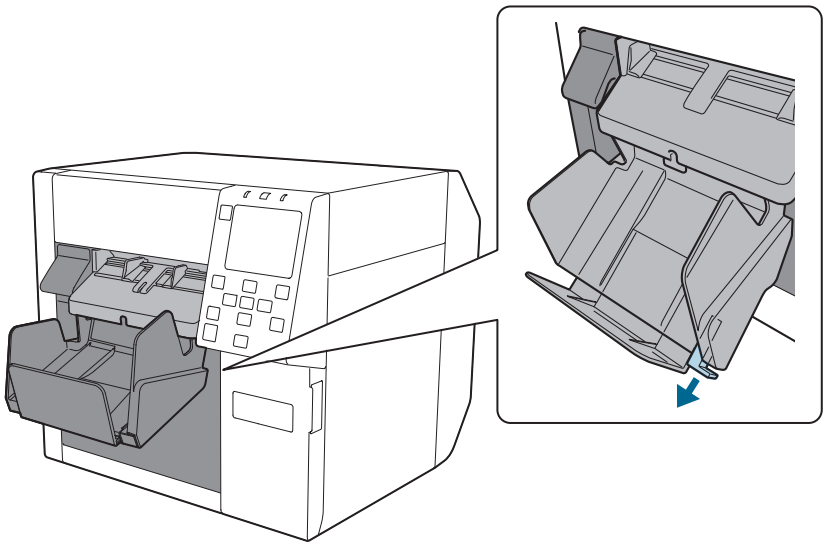

3 Extend the tray until the paper length indication matches with the length of your paper.

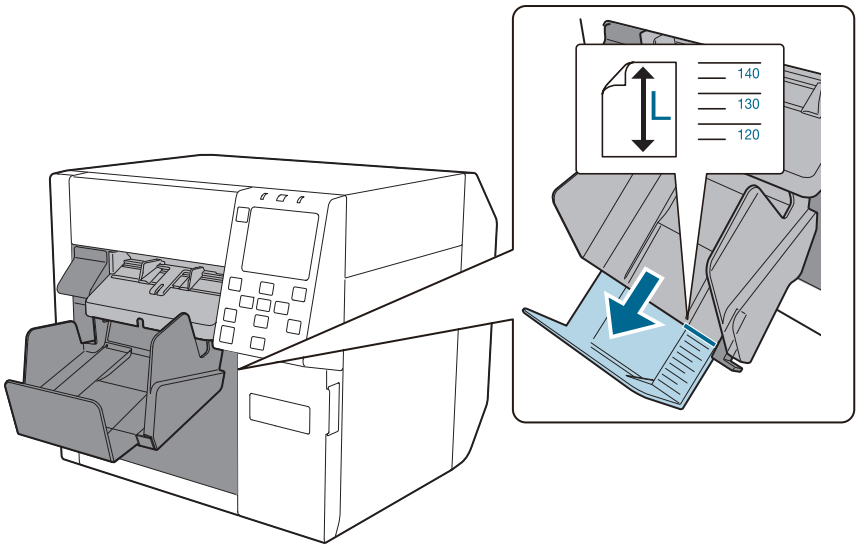

4 Push in lever at the bottom right of the OT-PT40 to lock it in place.

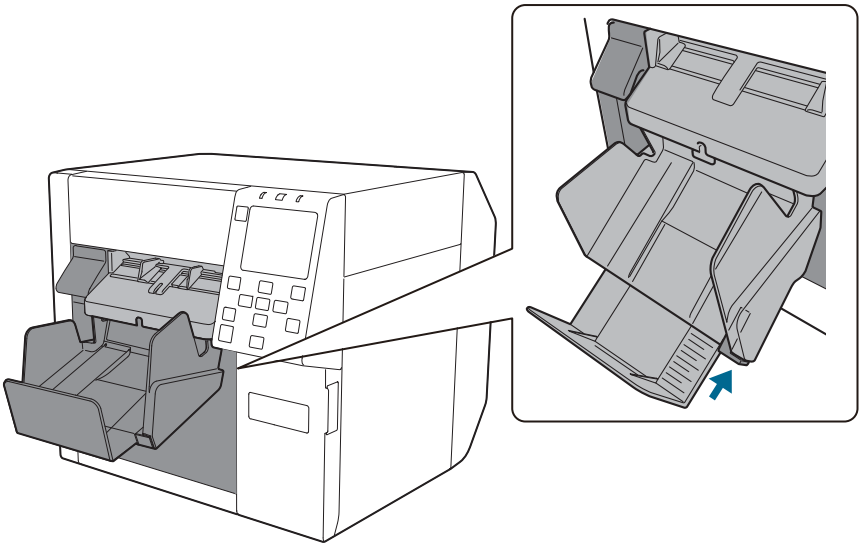

OT-WA34

OT-WA34 is an attachment that enables the printer to print on wristband. Attach this to the printer for printing on wristband.

Caution	❏ Attach OT-WA34 only for printing on wristband (WB-L1/M1/S1). It is not necessary for printing on any other type of paper or label. ❏ Be careful not to hurt yourself when attaching or removing OT-WA34 to/from the printer. ❏ Read the instruction manual included with the wristband to use it safely and correctly.

Attaching OT-WA34

1 Open the front cover.

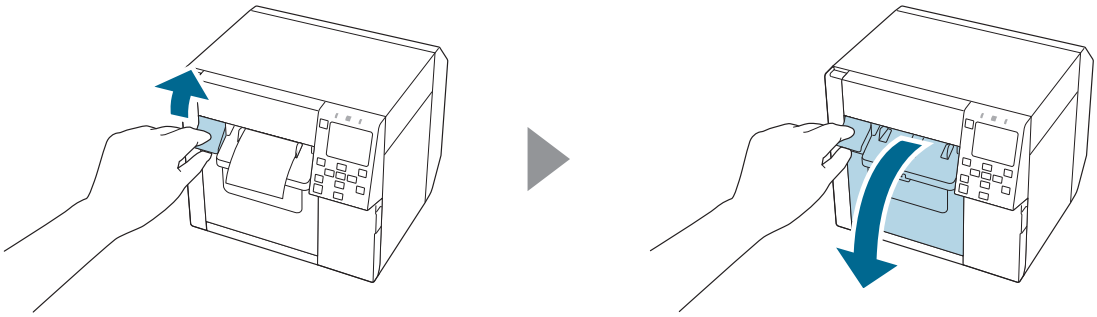

2 Remove roll paper or paper core from the printer.

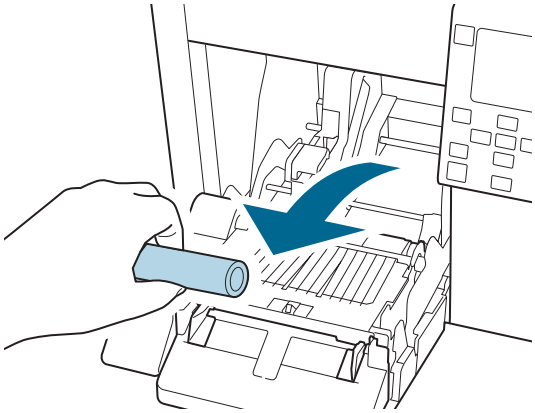

3 Attach the OT-WA34 by inserting it into the grooves inside the front cover.

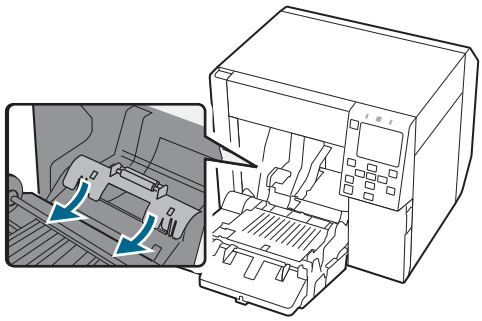

4 Close the front cover.

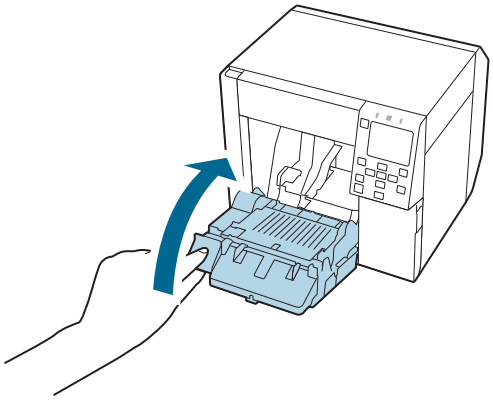

Removing OT-WA34

1 Open the front cover.

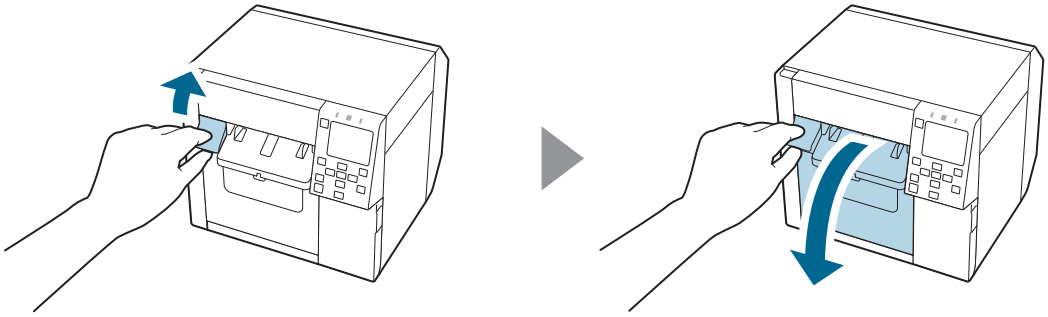

2 Remove the OT-WA34.

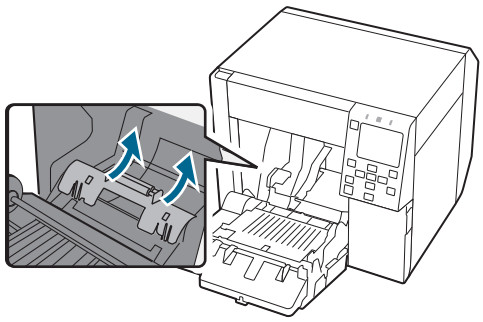

3 Close the front cover.

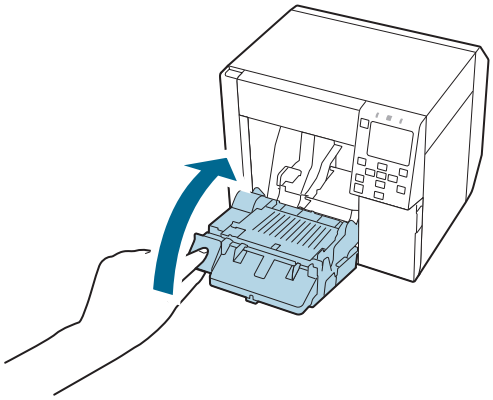

Restriction of Use

When this product is used for applications requiring high reliability/safety such as transportation devices related to aviation, rail, marine, automotive etc.; disaster prevention devices; various safety devices etc.; or functional/precision devices etc., you should use this product only after giving consideration to including fail-safes and redundancies into your design to maintain safety and total system reliability.

Notes

(1) All rights reserved. No part of this publication may be reproduced, stored in a retrieval system, or transmitted in any form or by any means, electronic, mechanical, photocopying, recording, or otherwise, without the prior written permission of Seiko Epson Corporation.
(2) The content of this manual is subject to change without notice.
(3) While every precaution has been taken in the preparation of this manual, Seiko Epson Corporation assumes no responsibility for errors or omissions.

(4) Neither is any liability assumed for damages resulting from the use of the information contained herein.

(5) Neither Seiko Epson Corporation nor its affiliates shall be liable to the purchaser of this product or third parties for damages, losses, costs, or expenses incurred by purchaser or third parties as a result of: accident, misuse, or abuse of this product or unauthorized modifications, repairs, or alterations to this product, or (excluding the U.S.) failure to strictly comply with Seiko Epson Corporation's operating and maintenance instructions.

(6) Seiko Epson Corporation shall not be liable for any damages or problems arising from the use of any options or any consumable products other than those designated as Genuine Epson Products or Epson Approved Products by Seiko Epson Corporation.

Trademarks

Microsoft®, Windows®, Windows Vista®, and Windows Server® are registered trademarks of Microsoft Corporation in the United States and/or other countries.