Questo manuale d'istruzione è fornito da trovaprezzi.it. Scopri tutte le offerte per MSI MAG321QR QD o cerca il tuo prodotto tra le migliori offerte di Monitor

trovaprezzi.it

Questo manuale d'istruzione è fornito da trovaprezzi.it. Scopri tutte le offerte per MSI MAG321QR QD o cerca il tuo prodotto tra le migliori offerte di Monitor

G & MAG Series

LCD Monitor

G321Q (3DB9)

MAG321QR-QD (3DB9)

User Guide

Contents

Getting Started 3
- Package Contents 3
- Installing the Monitor Stand 4
- Adjusting the Monitor 6
- Monitor Overview 8
- Connecting the Monitor to PC 11

OSD Setup 13
- Navi Key 13
- Hot Key 14

OSD Menus 15
- Gaming 16
- Professional 19
- Image 20
- Input Source 21
- Navi Key 21
- Setting 22

Specifications 24

Preset Display Modes 26

Troubleshooting 28

Safety Instructions 29

TÜV Rheinland Certification 31

Regulatory Notices 32

Revision

V1.0, 2022/11

Getting Started

This chapter provides you with the information on hardware setup procedures. While connecting devices, be careful in holding the devices and use a grounded wrist strap to avoid static electricity.

Package Contents

Monitor	G321Q MAG321QR-QD
Documentation	Quick Start Guide
Accessories	Power Cord
	External Power Supply
	Screw(s) for Wall Mount Bracket(s)
	Stand with Screw(s)
	Stand Base with Screw(s)
Cables	DisplayPort Cable (Optional)
	Premium High Speed HDMI™ Cable (Optional)
	USB Upstream Cable (for USB Type-B Upstream Port) (Optional)

Important

- *Contact your place of purchase or local distributor if any of the items is damaged or missing.*
- *Package contents may vary by country.*
- *The included power cord is exclusively for this monitor and should not be used with other products.*

Installing the Monitor Stand

1. Leave the monitor in its protective foam packaging. Align the stand bracket to the monitor groove.
2. Tighten the stand bracket with screws.
3. Connect the base to the stand and tighten the base screw to secure the base.
4. Make sure the stand assembly is properly installed before setting the monitor upright.

G321Q

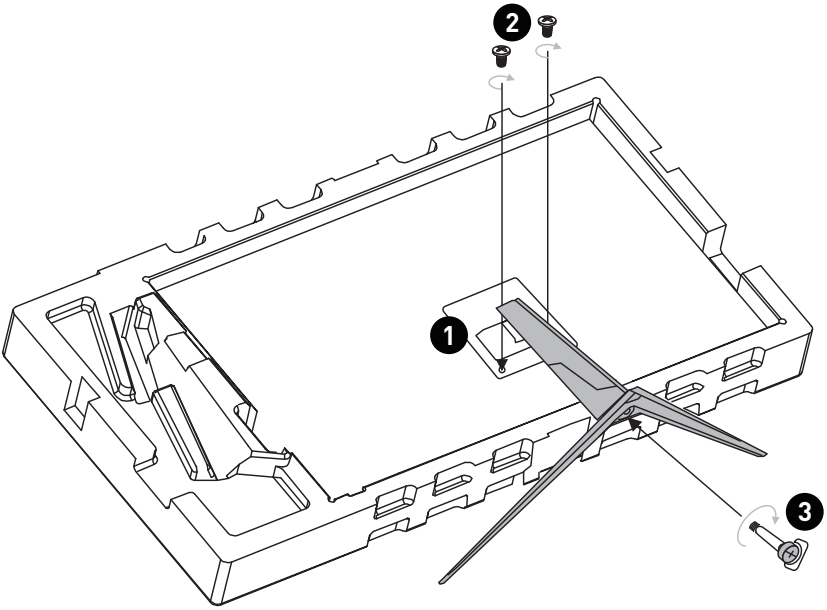

MAG321QR-QD

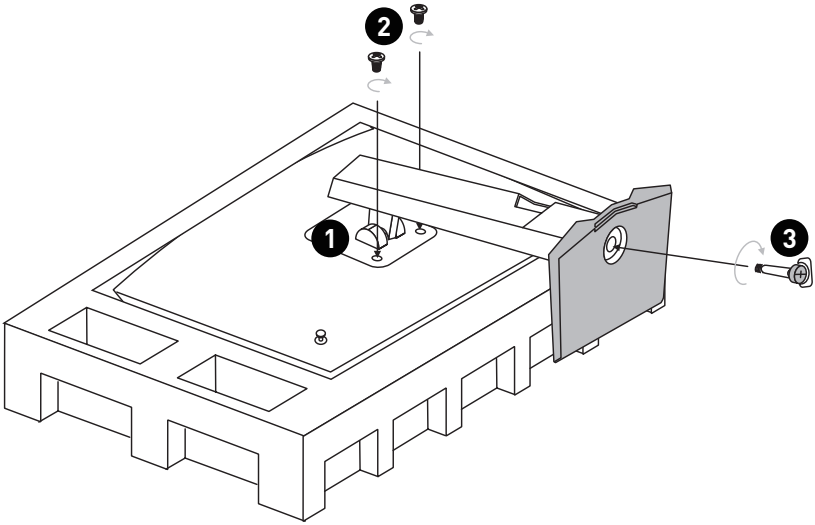

Important

- *Place the monitor on a soft, protected surface to avoid scratching the display panel.*
- *Do not use any sharp objects on the panel.*
- *The groove for installing the stand bracket can also be used for wall mount. Please contact your dealer for proper wall mount kit.*
- *This product comes with NO protective film to be removed by the user! Any mechanical damages to the product including removal of the polarizing film may affect the warranty!*

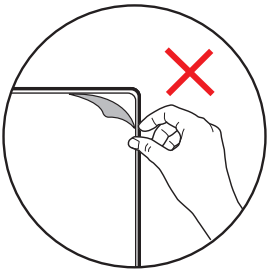

Adjusting the Monitor

This monitor is designed to maximize your viewing comfort with its adjustment capabilities.

Important

- *Avoid touching the display panel when adjusting the monitor.*
- *Please slightly tilt the monitor backwards before pivoting it.*

G321Q

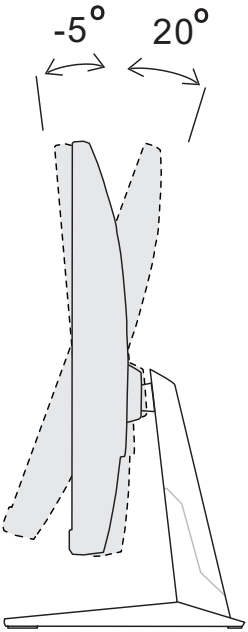

MAG321QR-QD

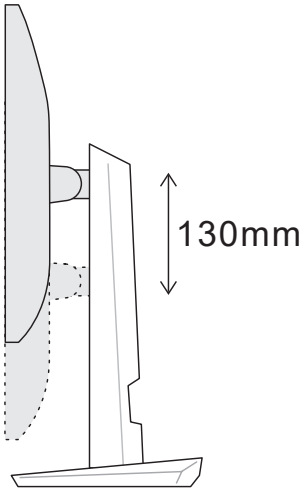

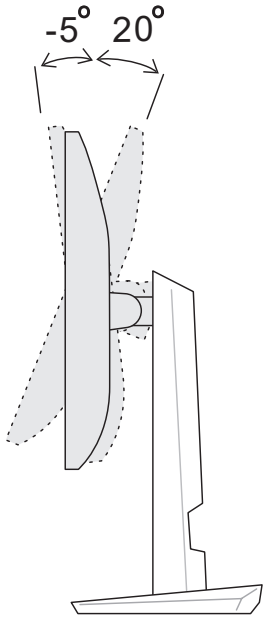

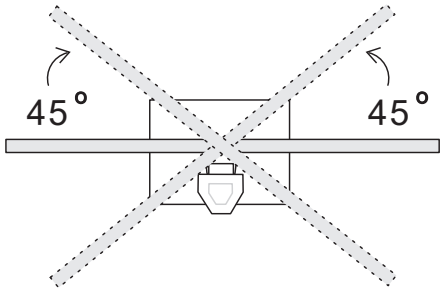

Monitor Overview

G321Q

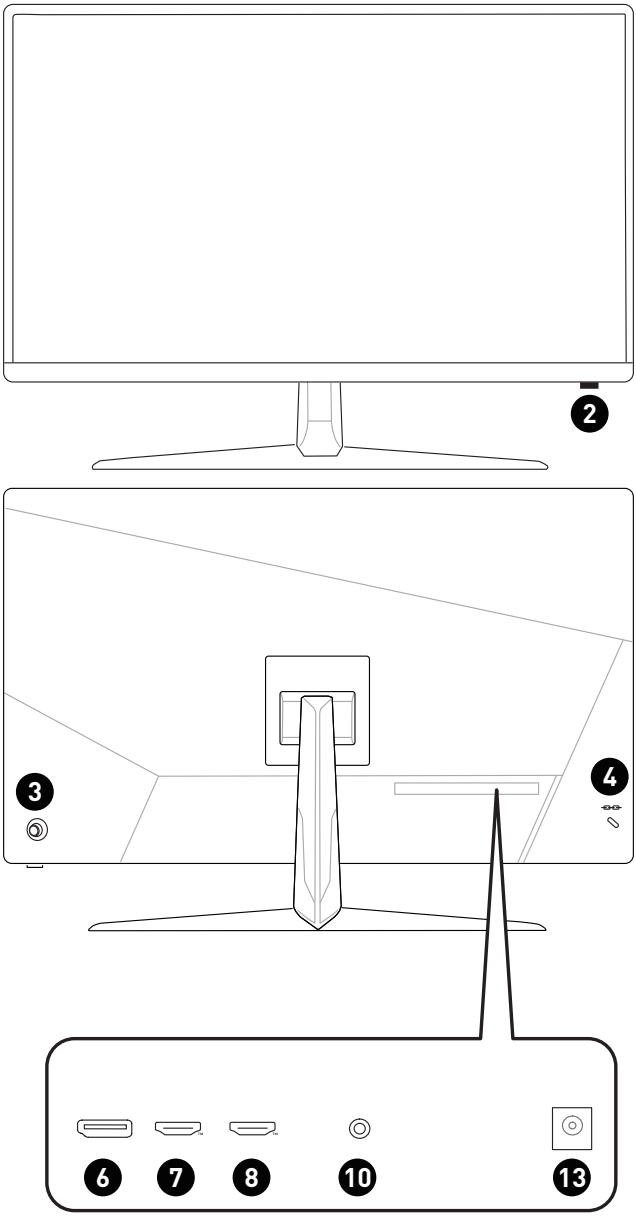

MAG321QR-QD

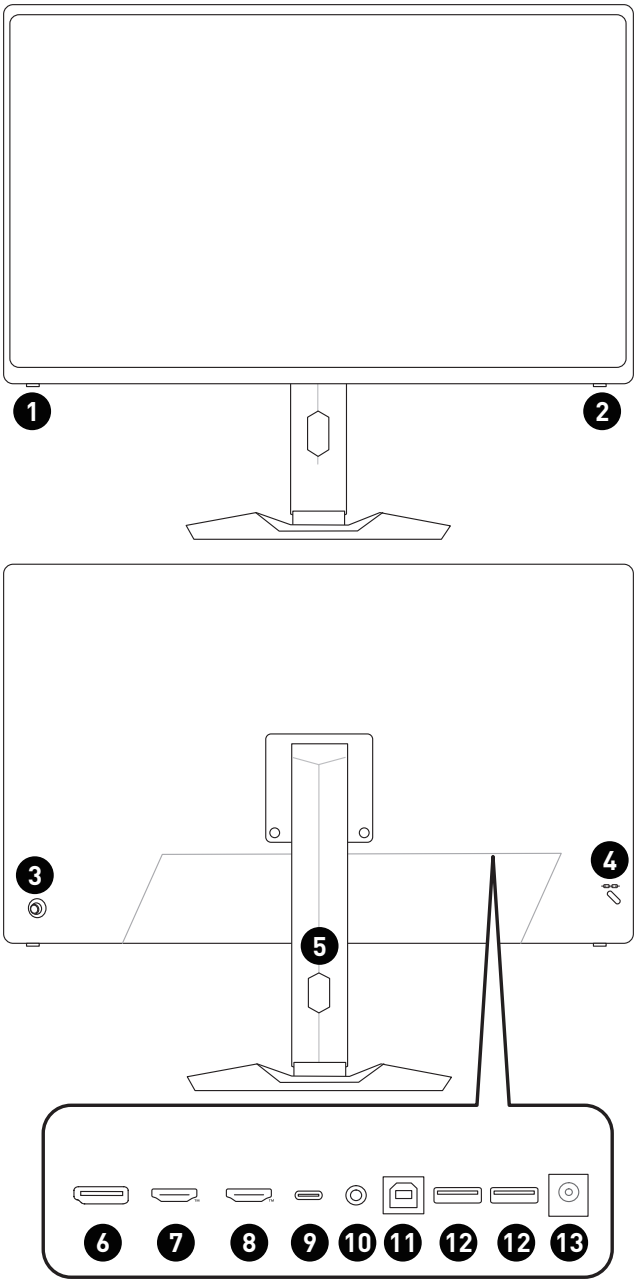

1	**Macro Key** To activate OSD Application.
2	**Power Button**
3	**Navi Key**
4	**Kensington Lock**
5	**Cable Routing Hole**
6	**DisplayPort** Supports 2560x1440@170Hz as specified in DisplayPort 1.2a.
7	**HDMI™ Connector** Supports HDMI™ CEC, 2560x1440@144Hz as specified in HDMI™ 2.0b.
8	**HDMI™ Connector** Supports 2560x1440@144Hz as specified in HDMI™ 2.0b.
9	**USB Type-C Port** This port supports DisplayPort Alternate (DP Alt) Mode and up to 5V/3A (15W) power delivery.
10	**Headphone Jack**
11	**USB 2.0 Type-B Upstream Port** For USB Upstream Cable. ***Important*** *Check the package for USB Upstream Cable and connect it to the PC and monitor. Once this cable is connected, the USB Type-A Downstream Ports on the monitor will be ready for use.* 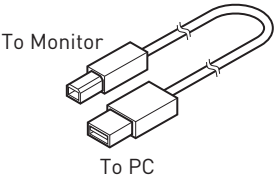
12	**USB 2.0 Type-A Port**
13	**Power Jack**

Connecting the Monitor to PC

1. Turn off your computer.
2. Connect the video cable from the monitor to your computer.
3. Assemble the monitor power adapter & power cord. (Figure A)
4. Connect the power adapter to the monitor power jack. (Figure B)
5. Plug the power cord into the electrical outlet. (Figure C)
6. Turn on the monitor. (Figure D)
7. Power on the computer and the monitor will auto detect the signal source.

G321Q

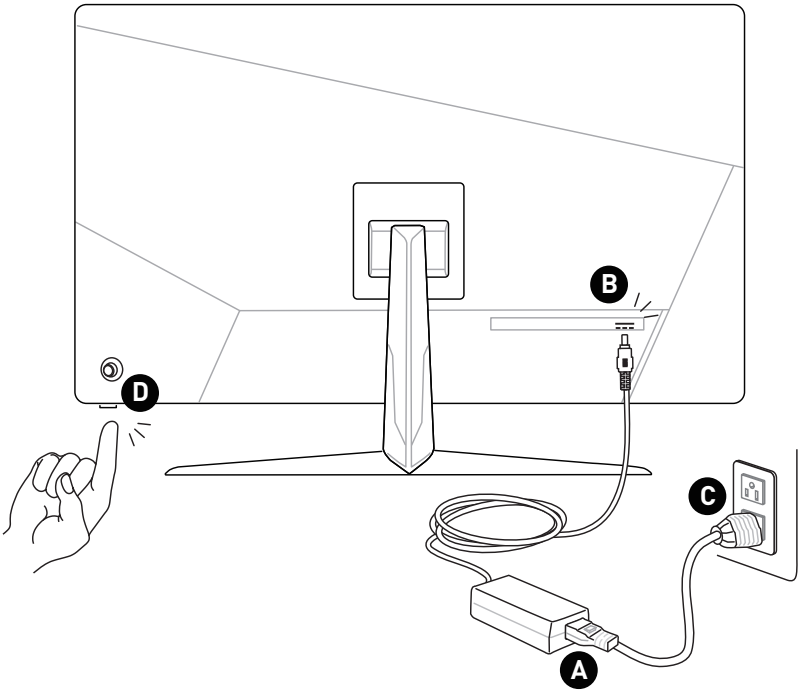

MAG321QR-QD

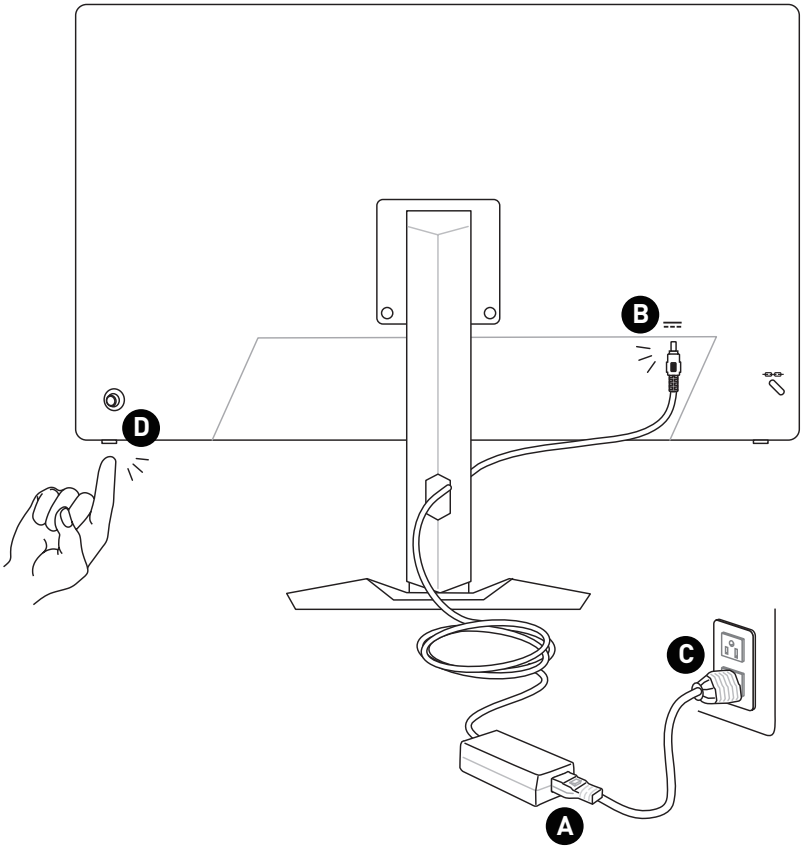

OSD Setup

This chapter provides you with essential information on OSD Setup.

Important

All information is subject to change without prior notice.

Navi Key

The monitor comes with a Navi Key, a multi-directional control that helps navigate the On-Screen Display (OSD) menu.

G321Q

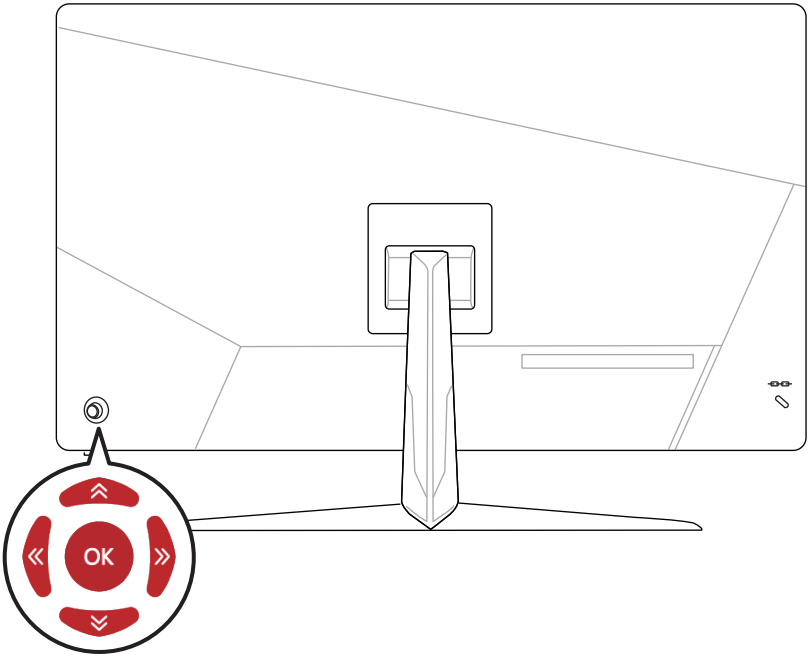

MAG321QR-QD

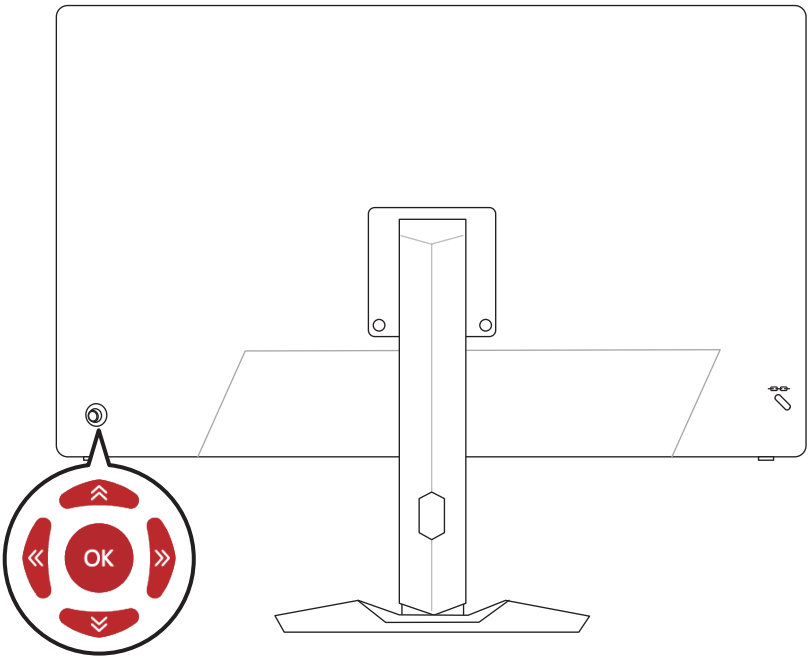

Up/Down/Left/Right:

- selecting function menus and items
- adjusting function values
- entering into/exiting from function menus

Press (OK):

- launching the On-Screen Display (OSD)
- entering submenus
- confirming a selection or setting

Hot Key

- Users may enter into preset function menus by moving the Navi Key up, down, left or right when the OSD menu is inactive.
- Users may customize their own Hot Keys to enter into different function menus.

OSD Menus

G321Q

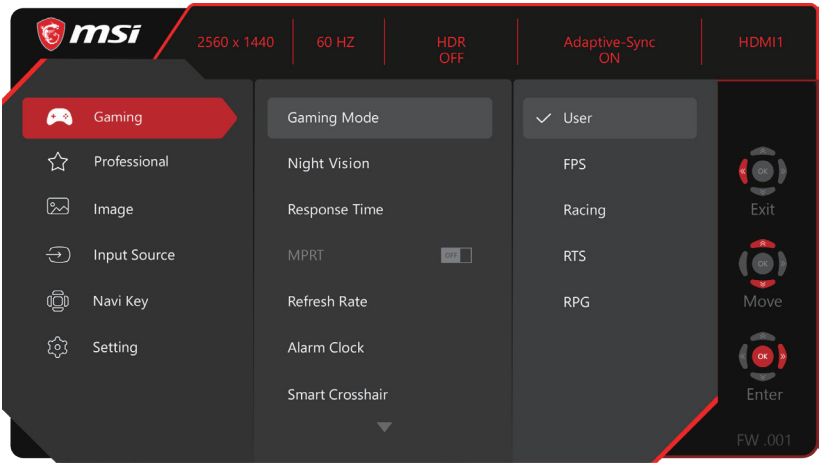

MAG321QR-QD

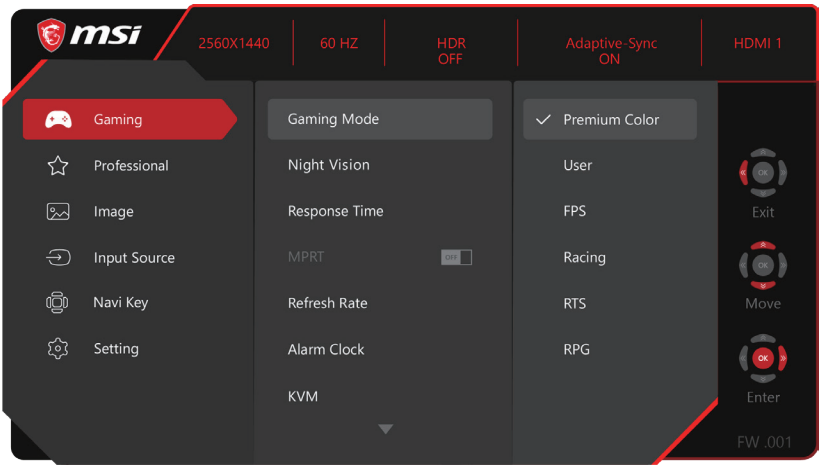

Important

The following settings will be grayed out when HDR signals are received:

- *Night Vision*
- *MPRT*
- *Low Blue Light*
- *HDCR*
- *Brightness*
- *Contrast*
- *Color Temperature*

Gaming

<table>
<tr><th>1st Level Menu</th><th>2nd/3rd Level Menu</th><th>Description</th></tr>
<tr><td rowspan="6">Game Mode</td><td>Premium Color
(for MAG321QR-QD)</td><td rowspan="6">• Use Up or Down Button to select and preview mode effects.
• Press the OK Button to confirm and apply your mode type.</td></tr>
<tr><td>User</td></tr>
<tr><td>FPS</td></tr>
<tr><td>Racing</td></tr>
<tr><td>RTS</td></tr>
<tr><td>RPG</td></tr>
<tr><td rowspan="5">Night Vision</td><td>OFF</td><td rowspan="5">• This function optimizes background brightness and is recommended for FPS games.</td></tr>
<tr><td>Normal</td></tr>
<tr><td>Strong</td></tr>
<tr><td>Strongest</td></tr>
<tr><td>A.I.</td></tr>
<tr><td rowspan="3">Response Time</td><td>Normal</td><td rowspan="3">• Activating the following functions will affect Response Time:
<table>
<tr><th>Activated Function</th><th>Response Time Status</th></tr>
<tr><td>» MPRT</td><td>Unable to select</td></tr>
</table></td></tr>
<tr><td>Fast</td></tr>
<tr><td>Fastest</td></tr>
<tr><td rowspan="2">MPRT</td><td>OFF</td><td rowspan="2">• Activating MPRT will affect:
<table>
<tr><th>Affected Function</th><th>Function Status</th></tr>
<tr><td>» Response Time
» Brightness</td><td>Unable to select</td></tr>
<tr><td>» Adaptive-Sync
» HDCR</td><td>Set to OFF</td></tr>
</table>
• MPRT is available when the refresh rate is over 85 Hz.</td></tr>
<tr><td>ON</td></tr>
</table>

1st Level Menu	2nd/3rd Level Menu		Description
Refresh Rate	Location	Left Top	• Location is adjustable in OSD Menu. Press the OK Button to confirm and apply your Refresh Rate Location. • This monitor follows and works at the Operating System's preset Screen Refresh Rate.
		Right Top	
		Left Bottom	
		Right Bottom	
		Customize	
	OFF		
	ON		
Alarm Clock	Location	Left Top	• After setting the time, press the OK Button to activate the timer. • Users have to manually restore their preset Alarm Clock after any AC power loss and reconnection.
		Right Top	
		Left Bottom	
		Right Bottom	
		Customize	
	OFF		
	15:00	00:01 ~ 99:59	
	30:00		
	45:00		
	60:00		
KVM (for MAG321QR-QD)	Auto		• Auto allows the monitor to automatically switch between USB input sources, such as keyboards, mice or other USB devices. • Users can also designate Upstream port or USB Type-C as the only USB signal source.
	Upstream		
	Type-C		

<table>
<tr><th>1st Level Menu</th><th colspan="2">2nd/3rd Level Menu</th><th>Description</th></tr>
<tr><td rowspan="6">Smart Crosshair</td><td rowspan="2">Icon</td><td>None</td><td rowspan="6">• Through AI algorithm, this function enhances the visibility of in-game crosshair.
• Users can select the color and position of the crosshair.</td></tr>
<tr><td> 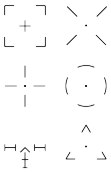 </td></tr>
<tr><td rowspan="3">Color</td><td>White</td></tr>
<tr><td>Red</td></tr>
<tr><td>Auto</td></tr>
<tr><td colspan="2">Position</td></tr>
<tr><td colspan="2">Reset</td></tr>
<tr><td rowspan="2">Adaptive-Sync</td><td colspan="2">OFF</td><td rowspan="2">• Adaptive-Sync prevents screen tearing.
• Activating Adaptive-Sync will affect:
<table><tr><th>Affected Function</th><th>Function Status</th></tr><tr><td>» MPRT</td><td>Set to OFF</td></tr></table></td></tr>
<tr><td colspan="2">ON</td></tr>
</table>

Professional

<table>
<tr><th>1st Level Menu</th><th>2nd Level Menu</th><th>Description</th></tr>
<tr><td rowspan="11">Pro Mode</td><td>Eco</td><td rowspan="11">• Use Up or Down Button to select and preview mode effects.
• Press the OK Button to confirm and apply your mode type.</td></tr>
<tr><td>User</td></tr>
<tr><td>Anti-Blue</td></tr>
<tr><td>Movie</td></tr>
<tr><td>Office</td></tr>
<tr><td>sRGB</td></tr>
<tr><td>Adobe RGB (for MAG321QR-QD)</td></tr>
<tr><td>Display P3 (for MAG321QR-QD)</td></tr>
<tr><td>Calibration 1 (for MAG321QR-QD)</td></tr>
<tr><td>Calibration 2 (for MAG321QR-QD)</td></tr>
<tr><td>Calibration 3 (for MAG321QR-QD)</td></tr>
<tr><td rowspan="2">Low Blue Light</td><td>OFF</td><td rowspan="2">• Low Blue Light protects your eyes against blue light. When enabled, Low Blue Light adjusts the screen color temperature to a more yellow glow.
• When Pro Mode is set to Anti-Blue, it is mandatory to enable Low Blue Light.</td></tr>
<tr><td>ON</td></tr>
<tr><td rowspan="2">HDCR</td><td>OFF</td><td rowspan="2">• HDCR enhances image quality by increasing the contrast of images.
• Activating HDCR will affect:
<table><tr><th>Affected Function</th><th>Function Status</th></tr><tr><td>» Brightness</td><td>Unable to select</td></tr><tr><td>» MPRT</td><td>Set to OFF</td></tr></table></td></tr>
<tr><td>ON</td></tr>
</table>

<table>
<tr><th>1st Level Menu</th><th>2nd Level Menu</th><th>Description</th></tr>
<tr><td rowspan="2">MPRT</td><td>OFF</td><td rowspan="2">• Activating MPRT will affect:<table><tr><th>Affected Function</th><th>Function Status</th></tr><tr><td>» Response Time
» Brightness</td><td>Unable to select</td></tr><tr><td>» Adaptive-Sync
» HDCR</td><td>Set to OFF</td></tr></table>• MPRT is available when the refresh rate is over 85 Hz.</td></tr>
<tr><td>ON</td></tr>
<tr><td rowspan="5">Image Enhancement</td><td>OFF</td><td rowspan="5">• Image Enhancement enhances image edges to improve their acutance.</td></tr>
<tr><td>Weak</td></tr>
<tr><td>Medium</td></tr>
<tr><td>Strong</td></tr>
<tr><td>Strongest</td></tr>
</table>

Image

<table>
<tr><th>1st Level Menu</th><th colspan="2">2nd/3rd Level Menu</th><th>Description</th></tr>
<tr><td>Brightness</td><td colspan="2">0-100</td><td>• Properly adjust Brightness according to the surrounding lighting.
• Activating the following functions will affect Brightness:<table><tr><th>Activated Function</th><th>Brightness Status</th></tr><tr><td>» MPRT
» HDCR</td><td>Unable to select</td></tr></table></td></tr>
<tr><td>Contrast</td><td colspan="2">0-100</td><td>• Properly adjust Contrast to relax your eyes.</td></tr>
<tr><td>Sharpness</td><td colspan="2">0-5</td><td>• Sharpness improves clarity and details of images.</td></tr>
<tr><td rowspan="6">Color Temperature</td><td colspan="2">Cool</td><td rowspan="6">• Use Up or Down Button to select and preview mode effects.
• Press the OK Button to confirm and apply your mode type.
• Users can adjust Color Temperature in Customization mode.</td></tr>
<tr><td colspan="2">Normal</td></tr>
<tr><td colspan="2">Warm</td></tr>
<tr><td rowspan="3">Customization</td><td>R (0-100)</td></tr>
<tr><td>G (0-100)</td></tr>
<tr><td>B (0-100)</td></tr>
</table>

1st Level Menu	2nd/3rd Level Menu	Description
Screen Size	Auto	• Users can adjust Screen Size in any mode, any resolution and any screen refresh rate. • Activating Screen Size 16:10 will affect: » DP Overclocking — Unable to select
	4:3	
	16:9	
	16:10	

Input Source

1st Level Menu	2nd Level Menu	Description
HDMI™1		• Users can adjust Input Source in any mode.
HDMI™2		
DP		
Type C (for MAG321QR-QD)		
Auto Scan	OFF	• Users can use the Navi Key to select Input Source at below status: • While "Auto Scan" is set to "OFF" with the monitor at power saving mode; • While "No Signal" message box is shown on the monitor.
	ON	

Navi Key

1st Level Menu	2nd Level Menu	Description
Up Down Left Right	OFF	• All Navi Key items can be adjusted via OSD Menus.
	Brightness	
	Game Mode	
	Smart Crosshair	
	Alarm Clock	
	Input Source	
	Refresh Rate	
	Info. On Screen	
	Night Vision	
	KVM (for MAG321QR-QD)	

Setting

1st Level Menu	2nd Level Menu	Description
Language	繁體中文	• Users have to press the OK Button to confirm and apply the Language setting. • Language is an independent setting. Users' own language setting will override the factory default. When users set Reset to Yes, Language will not be changed.
	English	
	Français	
	Deutsch	
	Italiano	
	Español	
	한국어	
	日本語	
	Русский	
	Português	
	简体中文	
	Bahasa Indonesia	
	Türkçe	
	(More languages coming soon)	
Transparency	0~5	• Users can adjust Transparency in any mode.
OSD Time Out	5~30s	• Users can adjust OSD Time Out in any mode.
RGB LED (for MAG321QR-QD)	OFF	• Users can adjust RGB LED to ON or OFF.
	ON	
Power Button	OFF	• When set to OFF, users can press the power button to turn off the monitor.
	Standby	• When set to Standby, users can press the power button to turn off the panel and backlight.
Info. On Screen	OFF	• The information of the monitor status will be shown on the right side of the screen.
	ON	
DP OverClocking	OFF	• To overclock the monitor refresh rate, users have to set DP OverClocking to ON.
	ON	

1st Level Menu	2nd Level Menu	Description

HDMI™ CEC	OFF	• HDMI™ CEC (Consumer Electronics Control) supports Sony PlayStation®, Nintendo® Switch™, Xbox Series X|S consoles and various audio-visual devices that are CEC-capable.
		• If HDMI™ CEC is set to ON:
		  • The monitor will automatically power on when the CEC device is turned on.
		  • The CEC device will enter power saving mode when the monitor is turned off.
		  • When Sony PlayStation®, Nintendo® Switch™, or Xbox Series X|S console is connected, Game Mode and Pro Mode will be automatically set to default modes and can be adjusted to users' preferred modes later.

	ON	
Reset	YES	• Users can Reset and restore settings to original OSD Default in any mode.
	NO	

Specifications

Monitor	G321Q	MAG321QR-QD
Size	31.5 inch	
Curvature	Flat	
Panel Type	IPS	
Resolution	2560 x 1440	
Aspect Ratio	16:9	
Brightness	300 nits (typ.)	350 nits (typ.)
Contrast Ratio	1200:1	
Refresh Rate	170Hz (Default 165Hz)	
Response Time	1ms (MPRT) 4ms (GTG)	
I/O	• DisplayPort x1 • HDMI™ Connector x2 • Headphone Jack x1	• DisplayPort x1 • HDMI™ Connector x2 • USB Type-C Port x1 • USB 2.0 Type-A Port x2 • USB 2.0 Type-B Upstream Port x1 • Headphone Jack x1
View Angles	178°(H) , 178°(V)	
DCI-P3*/ sRGB	93%/ 123%	97%/ 140%
Surface Treatment	Anti-glare	
Display Colors	1.07B (8 bit + FRC)	
Monitor Power Options	19V ⎓ 3.42A	19V ⎓ 4.74A
Power Adapter Specs	Model: DA-65C19	Model: DA-90J19
Power Input	100~240Vac, 50~60Hz, 1.6A	100~240Vac, 50~60Hz, 1.5A
Power Output	19V ⎓ 3.42A	19V ⎓ 4.74A
Adjustment (Tilt)	-5° ~ 20°	-5° ~ 20°
Adjustment (Height)		0 ~ 130mm
Adjustment (Swivel)		-45° ~ 45°

Monitor		G321Q	MAG321QR-QD
Kensington Lock		Yes	

VESA Mounting		• Plate Type: 100 x 100 mm
		• Screw Type: M4 x 10 mm
		  • Thread Diameter: 4 mm
		  • Thread Pitch: 0.7 mm
		  • Thread Length: 10 mm	

Dimension (W x H x D)		716.2 x 503.4 x 249.5 mm	716.2 x 476.0 x 233.7 mm
Weight	Net	6.8 kg	8.5 kg
	Gross	8.8 kg	11.2 kg
Environment	Operating	• Temperature: 0°C to 40°C • Humidity: 20% to 90%, non-condensing • Altitude: 0 ~ 5000m	
	Storage	• Temperature: -20°C to 60°C • Humidity: 10% to 90%, non-condensing	

* Based on CIE1976 test standards.

Preset Display Modes

Important

All information is subject to change without prior notice.

Standard	Resolution		Standard Mode	
			HDMI™	DP/ Tpye-C
VGA	640x480	@60Hz	V	V
		@67Hz	V	V
		@72Hz	V	V
		@75Hz	V	V
SVGA	800x600	@56Hz	V	V
		@60Hz	V	V
		@72Hz	V	V
		@75Hz	V	V
XGA	1024x768	@60Hz	V	V
		@70Hz	V	V
		@75Hz	V	V
SXGA	1280x1024	@60Hz	V	V
		@75Hz	V	V
WXGA+	1440x900	@60Hz	V	V
WSXGA+	1680x1050	@60Hz	V	V
Full HD	1920x1080	@60Hz	V	V
		@120Hz	V	V
QHD	2560x1440	@60Hz	V	V
		@120Hz	V	V
		@144Hz	V	V
		@165Hz		V
		@170Hz		V *

Standard	Resolution	Standard Mode	
		HDMI™	DP/ Tpye-C
Video Timing Resolution	480P		V
	576P		V
	720P	V	V
	1080P @60Hz	V	V
	1080P @120Hz	V	V
	2160P @30Hz	V	
	2160P @50Hz	V	
	2160P @60Hz	V	

* Users have to set DP OverClocking to ON. This is the highest refresh rate supported by DP OverClocking. If any monitor error occurs during overclocking, please downscale the refresh rate.

Standard	Resolution		Standard Size 16:10	
			HDMI™	DP/ Tpye-C
WXGA	1280x800	@60Hz	V	V
WXGA+	1440x900	@60Hz	V	V
WSXGA+	1680x1050	@60Hz	V	V
WUXGA	1920x1200	@60Hz	V	V
WQXGA	2560x1600	@60Hz	V	V
	2560x1600	@120Hz	V	V
	2560x1600	@144Hz		V
	2560x1600	@165Hz		V
Video Timing Resolution	480P			V
	576P			V
	720P		V	V
	1080P @60Hz		V	V
	1080P @120Hz		V	V
	2160P @30Hz		V	
	2160P @50Hz		V	
	2160P @60Hz		V	

Troubleshooting

The power LED is off.

- Press the monitor power button again.
- Check if the monitor power cable is properly connected.

No image.

- Check if the computer graphics card is properly installed.
- Check if the computer and monitor are connected to electrical outlets and are turned on.
- Check if the monitor signal cable is properly connected.
- The computer may be in Standby mode. Press any key to activate the monitor.

The screen image is not properly sized or centered.

- Refer to Preset Display Modes to set the computer to a setting suitable for the monitor to display.

No Plug & Play.

- Check if the monitor power cable is properly connected.
- Check if the monitor signal cable is properly connected.
- Check if the computer and graphics card are Plug & Play compatible.

The icons, font or screen are fuzzy, blurry or have color problems.

- Avoid using any video extension cables.
- Adjust brightness and contrast.
- Adjust RGB color or tune color temperature.
- Check if the monitor signal cable is properly connected.
- Check for bent pins on the signal cable connector.

The monitor starts flickering or shows waves.

- Change the refresh rate to match the capabilities of your monitor.
- Update your graphics card drivers.
- Keep the monitor away from electrical devices that may cause electromagnetic interference (EMI).

Safety Instructions

- Read the safety instructions carefully and thoroughly.
- All cautions and warnings on the device or User Guide should be noted.
- Refer servicing to qualified personnel only.

Power

- Make sure that the power voltage is within its safety range and has been adjusted properly to the value of 100~240V before connecting the device to the power outlet.
- If the power cord comes with a 3-pin plug, do not disable the protective earth pin from the plug. The device must be connected to an earthed mains socket-outlet.
- Please confirm the power distribution system in the installation site shall provide the circuit breaker rated 120/240V, 20A (maximum).
- Always disconnect the power cord or switch the wall socket off if the device would be left unused for a certain time to achieve zero energy consumption.
- Place the power cord in a way that people are unlikely to step on it. Do not place anything on the power cord.
- If this device comes with an adapter, use only the MSI provided AC adapter approved for use with this device.

Battery

Please take special precautions if this device comes with a battery.

- Danger of explosion if battery is incorrectly replaced. Replace only with the same or equivalent type recommended by the manufacturer.
- Avoid disposal of a battery into fire or a hot oven, or mechanically crushing or cutting of a battery, which can result in an explosion.
- Avoid leaving a battery in an extremely high temperature or extremely low air pressure environment that can result in an explosion or the leakage of flammable liquid or gas.
- Do not ingest battery. If the coin/button cell battery is swallowed, it can cause severe internal burns and can lead to death. Keep new and used batteries away from children.

European Union:

Batteries, battery packs, and accumulators should not be disposed of as unsorted household waste. Please use the public collection system to return, recycle, or treat them in compliance with the local regulations.

BSMI:

廢電池請回收
For better environmental protection, waste batteries should be collected separately for recycling or special disposal.

California, USA:

The button cell battery may contain perchlorate material and requires special handling when recycled or disposed of in California.
For further information please visit: https://dtsc.ca.gov/perchlorate/

Environment

- To reduce the possibility of heat-related injuries or of overheating the device, do not place the device on a soft, unsteady surface or obstruct its air ventilators.
- Use this device only on a hard, flat and steady surface.
- To prevent the device from tipping over, secure the device to a desk, wall or fixed object with an anti-tip fastener that helps to properly support the device and keep it safe in place.
- To prevent fire or shock hazard, keep this device away from humidity and high temperature.
- Do not leave the device in an unconditioned environment with a storage temperature above 60°C or below -20°C, which may damage the device.
- The maximum operating temperature is around 40°C.
- When cleaning the device, be sure to remove the power plug. Use a piece of soft cloth rather than industrial chemical to clean the device. Never pour any liquid into the opening; that could damage the device or cause electric shock.
- Always keep strong magnetic or electrical objects away from the device.
- If any of the following situations arises, get the device checked by service personnel:
  - The power cord or plug is damaged.
  - Liquid has penetrated into the device.
  - The device has been exposed to moisture.
  - The device does not work well or you can not get it working according to the User Guide.
  - The device has dropped and damaged.
  - The device has obvious sign of breakage.

TÜV Rheinland Certification

TÜV Rheinland Low Blue Light Certification

Blue light has been shown to cause eye fatigue and discomfort. MSI now offers monitors with TÜV Rheinland Low Blue Light certification to ensure users' eye comfort and well-being. Please follow the instructions below to reduce the symptoms from extended exposure to the screen and blue light.

Low Blue Light (Software Solution)

www.tuv.com

- Place the screen 20 – 28 inches (50 – 70 cm) away from your eyes and a little below eye level.
- Consciously blinking the eyes every now and then will help to reduce eye strain after extended screen time.
- Take breaks for 20 minutes every 2 hours.
- Look away from the screen and gaze at a distant object for at least 20 seconds during breaks.
- Make stretches to relieve body fatigue or pain during breaks.
- Use the Reader/Anti-Blue mode or turn on the optional Low Blue Light function.

TÜV Rheinland Flicker Free Certification

Flicker Free

www.tuv.com

- TÜV Rheinland has tested this product to ascertain whether the display produces visible and invisible flicker for the human eye and therefore strains the eyes of users.
- TÜV Rheinland has defined a catalogue of tests, which sets out minimum standards at various frequency ranges. The test catalogue is based on internationally applicable standards or standards common within the industry and exceeds these requirements.
- The product has been tested in the laboratory according to these criteria.
- The keyword "Flicker Free" confirms that the device has no visible and invisible flicker defined in this standard within the range of 0 - 3000 Hz under various brightness settings.
- The display will not support Flicker Free when Anti Motion Blur/MPRT is enabled. (The availability of Anti Motion Blur/MPRT varies by products.)

Regulatory Notices

CE Conformity

This device complies with the requirements set out in the Council Directive on the Approximation of the Laws of the Member States relating to Electromagnetic Compatibility (2014/30/EU), Low-voltage Directive (2014/35/EU), ErP Directive (2009/125/EC) and RoHS directive (2011/65/EU). This product has been tested and found to comply with the harmonized standards for Information Technology Equipment published under Directives of Official Journal of the European Union.

FCC-B Radio Frequency Interference Statement

This equipment has been tested and found to comply with the limits for a Class B digital device, pursuant to Part 15 of the FCC Rules. These limits are designed to provide reasonable protection against harmful interference in a residential installation. This equipment generates, uses and can radiate radio frequency energy and, if not installed and used in accordance with the instruction manual, may cause harmful interference to radio communications. However, there is no guarantee that interference will not occur in a particular installation. If this equipment does cause harmful interference to radio or television reception, which can be determined by turning the equipment off and on, the user is encouraged to try to correct the interference by one or more of the measures listed below:

- Reorient or relocate the receiving antenna.
- Increase the separation between the equipment and receiver.
- Connect the equipment into an outlet on a circuit different from that to which the receiver is connected.
- Consult the dealer or an experienced radio/television technician for help.

Notice 1

The changes or modifications not expressly approved by the party responsible for compliance could void the user's authority to operate the equipment.

Notice 2

Shielded interface cables and AC power cord, if any, must be used in order to comply with the emission limits.

This device complies with Part 15 of the FCC Rules. Operation is subject to the following two conditions:

1. This device may not cause harmful interference, and
2. This device must accept any interference received, including interference that may cause undesired operation.

MSI Computer Corp.

901 Canada Court, City of Industry, CA 91748, USA

(626) 913-0828

www.msi.com

WEEE Statement

Under the European Union ("EU") Directive on Waste Electrical and Electronic Equipment, Directive 2012/19/EU, products of "electrical and electronic equipment" cannot be discarded as municipal waste anymore and manufacturers of covered electronic equipment will be obligated to take back such products at the end of their useful life.

Chemical Substances Information

In compliance with chemical substances regulations, such as the EU REACH Regulation (Regulation EC No. 1907/2006 of the European Parliament and the Council), MSI provides the information of chemical substances in products at:

https://storage-asset.msi.com/html/popup/csr/evmtprtt_pcm.html

RoHS Statement

Japan JIS C 0950 Material Declaration

A Japanese regulatory requirement, defined by specification JIS C 0950, mandates that manufacturers provide material declarations for certain categories of electronic products offered for sale after July 1, 2006.

https://storage-asset.msi.com/html/popup/csr/cemm_jp.html

India RoHS

This product complies with the "India E-waste (Management and Handling) Rule 2011" and prohibits use of lead, mercury, hexavalent chromium, polybrominated biphenyls or polybrominated diphenyl ethers in concentrations exceeding 0.1 weight % and 0.01 weight % for cadmium, except for the exemptions set in Schedule 2 of the Rule.

Turkey EEE Regulation

Conforms to the EEE Regulations of the Republic Of Turkey.

Ukraine Restriction of Hazardous Substances

The equipment complies with requirements of the Technical Regulation, approved by the Resolution of Cabinet of Ministry of Ukraine as of December 3, 2008 № 1057, in terms of restrictions for the use of certain dangerous substances in electrical and electronic equipment.

Vietnam RoHS

As from December 1, 2012, all products manufactured by MSI comply with Circular 30/2011/TT-BCT temporarily regulating the permitted limits for a number of hazardous substances in electronic and electric products.

Green Product Features

- Reduced energy consumption during use and stand-by
- Limited use of substances harmful to the environment and health
- Easily dismantled and recycled
- Reduced use of natural resources by encouraging recycling
- Extended product lifetime through easy upgrades
- Reduced solid waste production through take-back policy

Environmental Policy

- The product has been designed to enable proper reuse of parts and recycling and should not be thrown away at its end of life.
- Users should contact the local authorized point of collection for recycling and disposing of their end-of-life products.
- Visit the MSI website and locate a nearby distributor for further recycling information.
- Users may also reach us at gpcontdev@msi.com for information regarding proper disposal, take-back, recycling, and disassembly of MSI products.

Warning!

Overuse of screens is likely to affect eyesight.

Recommendations:

1. Take a 10-minute break for every 30 minutes of screen time.
2. Children under 2 years of age should have no screen time. For children aged 2 years and over, screen time should be limited to less than one hour per day.

Copyright and Trademarks Notice

Copyright © Micro-Star Int'l Co., Ltd. All rights reserved. The MSI logo used is a registered trademark of Micro-Star Int'l Co., Ltd. All other marks and names mentioned may be trademarks of their respective owners. No warranty as to accuracy or completeness is expressed or implied. MSI reserves the right to make changes to this document without prior notice.

Technical Support

If a problem arises with your product and no solution can be obtained from the user's manual, please contact your place of purchase or local distributor. Alternatively, please visit https://www.msi.com/support/ for further guidance.