Questo manuale d'istruzione è fornito da trovaprezzi.it. Scopri tutte le offerte per Sharp PN-LC652 o cerca il tuo prodotto tra le migliori offerte di Monitor

Questo manuale d'istruzione è fornito da trovaprezzi.it. Scopri tutte le offerte per Sharp PN-LC652 o cerca il tuo prodotto tra le migliori offerte di Monitor

SHARP

PN-LC862
PN-LC752
PN-LC652

LCD MONITOR

OPERATION MANUAL

HDMI™

Information on the Disposal of this Equipment and its Batteries

IF YOU WISH TO DISPOSE OF THIS EQUIPMENT OR ITS BATTERIES, DO NOT USE THE ORDINARY WASTE BIN, AND DO NOT PUT THEM INTO A FIREPLACE!

Used electrical and electronic equipment and batteries should always be collected and treated SEPARATELY in accordance with local law.

Separate collection promotes an environment-friendly treatment, recycling of materials, and minimizing final disposal of waste. IMPROPER DISPOSAL can be harmful to human health and the environment due to certain substances! Take USED EQUIPMENT to a local, usually municipal, collection facility, where available.

Remove USED BATTERIES from equipment, and take them to a battery collection facility; usually a place where new batteries are sold.

If in doubt about disposal, contact your local authorities or dealer and ask for the correct method of disposal.

ONLY FOR USERS IN THE EUROPEAN UNION, AND SOME OTHER COUNTRIES; FOR INSTANCE NORWAY AND SWITZERLAND: Your participation in separate collection is requested by law.

The symbol shown above appears on electrical and electronic equipment and batteries (or the packaging) to remind users of this. If ‘Hg’ or ‘Pb’ appears below the symbol, this means that the battery contains traces of mercury (Hg) or lead (Pb), respectively.

Users from PRIVATE HOUSEHOLDS are requested to use existing return facilities for used equipment and batteries. Batteries are collected at points of sale. Return is free of charge.

If the equipment has been used for BUSINESS PURPOSES, please contact your SHARP dealer who will inform you about take-back. You might be charged for the costs arising from take-back. Small equipment (and small quantities) might be taken back by your local collection facility. For Spain: Please contact the established collection system or your local authority for take-back of your used products.

IMPORTANT INFORMATION

WARNING: TO REDUCE THE RISK OF FIRE OR ELECTRIC SHOCK, DO NOT EXPOSE THIS PRODUCT TO RAIN OR MOISTURE.

CAUTION

RISK OF ELECTRIC SHOCK
DO NOT OPEN

CAUTION: TO REDUCE THE RISK OF ELECTRIC SHOCK, DO NOT REMOVE COVER.
NO USER-SERVICEABLE PARTS INSIDE.
REFER SERVICING TO QUALIFIED SERVICE PERSONNEL.

The lightning flash with arrowhead symbol, within a triangle, is intended to alert the user to the presence of uninsulated “dangerous voltage” within the product’s enclosure that may be of sufficient magnitude to constitute a risk of electric shock to persons.

The exclamation point within a triangle is intended to alert the user to the presence of important operating and maintenance (servicing) instructions in the literature accompanying the product.

FOR CUSTOMERS IN U.K.
IMPORTANT

The wires in this mains lead are coloured in accordance with the following code:

GREEN-AND-YELLOW:	**Earth**
BLUE:	**Neutral**
BROWN:	**Live**

As the colours of the wires in the mains lead of this apparatus may not correspond with the coloured markings identifying the terminals in your plug proceed as follows:

- The wire which is coloured GREEN-AND-YELLOW must be connected to the terminal in the plug which is marked by the letter **E** or by the safety earth ⏚ or coloured green or green-and-yellow.
- The wire which is coloured BLUE must be connected to the terminal which is marked with the letter **N** or coloured black.
- The wire which is coloured BROWN must be connected to the terminal which is marked with the letter **L** or coloured red.

Ensure that your equipment is connected correctly. If you are in any doubt consult a qualified electrician.

“WARNING: THIS APPARATUS MUST BE EARTHED.”

To maintain compliance with EMC regulations, use shielded cables to connect to the following terminals: USB port, Mini AV input terminal, HDMI input terminal, HDMI output terminal, D-sub input terminal, DisplayPort input terminal, RS-232C input terminal, USB Type C port and TOUCH PANEL terminal.

DEAR SHARP CUSTOMER

Thank you for your purchase of a SHARP LCD product. To ensure safety and many years of trouble-free operation of your product, please read the Safety Precautions carefully before using this product.

SAFETY PRECAUTIONS

Electricity is used to perform many useful functions, but it can also cause personal injuries and property damage if improperly handled. This product has been engineered and manufactured with the highest priority on safety. However, improper use can result in electric shock and/or fire. In order to prevent potential danger, please observe the following instructions when installing, operating and cleaning the product. To ensure your safety and prolong the service life of your LCD product, please read the following precautions carefully before using the product.

1. Read instructions — All operating instructions must be read and understood before the product is operated.
2. Keep this manual in a safe place — These safety and operating instructions must be kept in a safe place for future reference.
3. Observe warnings — All warnings on the product and in the instructions must be observed closely.
4. Follow instructions — All operating instructions must be followed.
5. Cleaning — Unplug the power cord from the power outlet before cleaning the product. Use a dry cloth to clean the product. Do not use liquid cleaners or aerosol cleaners. Do not use dirty cloths. Doing so may damage the product.
6. Attachments — Do not use attachments not recommended by the manufacturer. Use of inadequate attachments can result in accidents.
7. Water and moisture — Do not use the product near water. Do not install the product in a place where water may splash onto it. Be careful of equipment which drains water such as an air-conditioner.
8. Ventilation — The vents and other openings in the cabinet are designed for ventilation.
   Do not cover or block these vents and openings since insufficient ventilation can cause overheating and/or shorten the life of the product. Do not place the product on a sofa, rug or other similar surface, since they can block ventilation openings. Do not place the product in an enclosed place such as a bookcase or rack, unless proper ventilation is provided or the manufacturer's instructions are followed.
9. Power cord protection — The power cords must be routed properly to prevent people from stepping on them or objects from resting on them.
10. The screen used in this product is made of glass. Therefore, it can break when the product is dropped or applied with impact. Be careful not to be injured by broken glass pieces in case the screen breaks.
11. Overloading — Do not overload power outlets or extension cords. Overloading can cause fire or electric shock.
12. Entering of objects and liquids — Never insert an object into the product through vents or openings. High voltage flows in the product, and inserting an object can cause electric shock and/or short internal parts.
    For the same reason, do not spill water or liquid on the product.
13. Servicing — Do not attempt to service the product yourself. Removing covers can expose you to high voltage and other dangerous conditions. Request a qualified service person to perform servicing.
14. Repair — If any of the following conditions occurs, unplug the power cord from the power outlet, and request a qualified service person to perform repairs.
    a. When the power cord or plug is damaged.
    b. When a liquid was spilled on the product or when objects have fallen into the product.
    c. When the product has been exposed to rain or water.
    d. When the product does not operate properly as described in the operating instructions.
       Do not touch the controls other than those described in the operating instructions. Improper adjustment of controls not described in the instructions can cause damage, which often requires extensive adjustment work by a qualified technician.
    e. When the product has been dropped or damaged.
    f. When the product displays an abnormal condition. Any noticeable abnormality in the product indicates that the product needs servicing.
15. Replacement parts — In case the product needs replacement parts, make sure that the service person uses replacement parts specified by the manufacturer, or those with the same characteristics and performance as the original parts. Use of unauthorized parts can result in fire, electric shock and/or other danger.
16. Safety checks — Upon completion of service or repair work, request the service technician to perform safety checks to ensure that the product is in proper operating condition.
17. Wall mounting — When mounting the product on a wall, be sure to install the product according to the method recommended by the manufacturer.
18. Heat sources — Keep the product away from heat sources such as radiators, heaters, stoves and other heat-generating products (including amplifiers).

19. Batteries — Incorrect use of batteries may cause the batteries to burst or ignite. A leaky battery may corrode the equipment, dirty your hands or spoil your clothing. In order to avoid these problems, make sure to observe the precautions below:
    - Use the specified batteries only.
    - Install the batteries with due attention to the plus (+) and minus (-) sides of the batteries according to the instructions in the compartment.
    - Do not mix old and new batteries.
    - Do not mix batteries of different types. Voltage specifications of batteries of the same shape may vary.
    - Replace an exhausted battery with a new one promptly.
    - If you will not use the remote control for a long time, remove the batteries.
    - If leaked battery fluid gets on your skin or clothing, rinse immediately and thoroughly. If it gets into your eye, bathe your eye well rather than rubbing and seek medical treatment immediately. Leaked battery fluid that gets into your eye or your clothing may cause a skin irritation or damage your eye.
20. Usage of the monitor must not be accompanied by fatal risks or dangers that, could lead directly to death, personal injury, severe physical damage or other loss, including nuclear reaction control in nuclear facility, medical life support system, and missile launch control in a weapon system.
21. Do not stay in contact with the parts of the product that become hot for long periods of time. Doing so may result in low-temperature burns.
22. Do not modify this product.

WARNING:
An apparatus with CLASS I construction shall be connected to a MAIN socket outlet with a protective earthing connection.

STABILITY HAZARD
If a monitor is not positioned in a sufficiently stable location, it can be potentially hazardous due to falling. Many injuries, particularly to children, can be avoided by taking simple precautions such as:
- Using fixing devices like wall mount brackets recommended by the manufacturer.
- Only using furniture that can safely support the monitor.
- Ensuring the monitor is not overhanging the edge of the supporting furniture.
- Not placing the monitor on tall furniture (for example, cupboards or bookcases) without anchoring both the furniture and the monitor to a suitable support.
- Not standing the monitors on cloth or other materials placed between the monitor and supporting furniture.
- Educating children about the dangers of climbing on furniture to reach the monitor or its controls.
- This equipment is not suitable for use in locations where children are likely to be present unsupervised.

Especially for child safety
- Don’t allow children to climb on or play with the monitor.
- Don’t place the monitor on furniture that can easily be used as steps, such as a chest of drawers.
- Remember that children can become excited while watching a program, especially on a “larger than life” monitor. Care should be taken to place or install the monitor where it cannot be pushed, pulled over, or knocked down.
- Care should be taken to route all cords and cables connected to the monitor so that they cannot be pulled or grabbed by curious children.

TIPS AND SAFETY INSTRUCTIONS

- The TFT color LCD panel used in this monitor is made with the application of high precision technology. However, there may be minute points on the screen where pixels never light or are permanently lit. Also, if the screen is viewed from an acute angle there may be uneven colors or brightness. Please note that these are not malfunctions but common phenomena of LCDs and will not affect the performance of the monitor.
- Do not display a still picture for a long period, as this could cause a residual image.
- Never rub or tap the monitor with hard objects.
- Please understand that our company bears no responsibility for errors made during use by the customer or a third party, nor for any other malfunctions or damage to this product arising during use, except where indemnity liability is recognized under law.
- This monitor and its accessories may be upgraded without advance notice.
- Do not use the monitor where there is a lot of dust, where humidity is high, or where the monitor may come into contact with oil or steam. Do not use in an environment where there are corrosive gases (sulfur dioxide, hydrogen sulfide, nitrogen dioxide, chlorine, ammonia, ozone, etc.). As this could lead to fire.
- Ensure that the monitor does not come into contact with water or other fluids. Ensure that no objects such as paper clips or pins enter the monitor as this could lead to fire or electric shock.
- Do not place the monitor on top of unstable objects or in unsafe places. Do not allow the monitor to receive strong shocks or to strongly vibrate. Causing the monitor to fall or topple over may damage it.
- Do not use the monitor near heating equipment or in places where there is likelihood of high temperature, as this may lead to generation of excessive heat and outbreak of fire.
- Do not use the monitor in places where it may be exposed to direct sunlight. Risk of cabinet deformation and failure if the monitor is used in direct sunlight.
- Please be sure to constantly remove dust and garbage that has attached to the ventilation opening. If dust collects in the ventilation opening or the inside of the monitor, it may lead to excessive heat, outbreak of fire, or malfunction.
  Please request a cleaning of the inside of the monitor from an authorized servicing dealer or service center.
- The power outlet shall be installed near the equipment and shall be easily accessible.
- Continuous operating time and warranty.
  This product is designed for a maximum daily use of 16 hours. Continual use in excess of 16 hours per day is not covered by the warranty.
- Do not touch the screen when turning on the monitor, it will lead to a malfunction. When this occurs, turn the monitor power off and then on.
- Do not operate the screen with a hard or pointed object such as a fingernail or pencil.
- Depending on the application used, the touch pen may not function.
- If another USB device is connected to the computer to which the touch panel is connected, do not operate the USB device during touch panel input. Input may not take place correctly.
- To maintain stable operation, this monitor must be restarted once a day.
  If “Power save mode” is on, turn off the power.
  If “Power save mode” is off, turn off the main power.
  This monitor can be restarted at the specified time. (See page 52.)
- If you or a third party uses the product incorrectly, or if the product is subjected to the effects of static electricity or electrical noise, or if the product malfunctions or is repaired, there is a risk that saved data will be corrupted or lost.
- Always back up important data to a USB flash drive.
- We bear no responsibility for protection of internal memory recorded content or related damages.

The Power Cord

- Use only the power cord supplied with the monitor.
- Do not damage the power cord nor place heavy objects on it, stretch it or over bend it. Also, do not add extension cords. Damage to the cord may result in fire or electric shock.
- Do not use the power cord with a power tap.
  Adding an extension cord may lead to fire as a result of overheating.
- Do not remove or insert the power plug with wet hands. Doing so could result in electric shock.
- Unplug the power cord if it is not used for a long time.
- Do not attempt to repair the power cord if it is broken or malfunctioning. Refer the servicing to the service representative.

Network

- When you use a network, your communication data is exposed to the risks of being stolen or illegally accessed.
  To avoid these risks, you need to use this monitor in a secure network environment.

Manual Scope

- Microsoft and Windows are trademarks of the Microsoft group of companies.
- Apple, Mac and macOS are trademarks of Apple Inc., registered in the U.S. and other countries.
- The terms HDMI, HDMI High-Definition Multimedia Interface, HDMI Trade dress and the HDMI Logos are trademarks or registered trademarks of HDMI Licensing Administrator, Inc.
- DisplayPort is a registered trademark of Video Electronics Standards Association.
- Google, Chrome OS and Android are trademarks or registered trademarks of Google LLC.
- Ethernet is a registered trademark of Xerox Corporation.
- VESA is either registered trademark or trademark of Video Electronics Standards Association in the United States and/or other countries.
- Bluetooth is a registered trademark of Bluetooth SIG, Inc.
- Arm and Cortex are registered trademarks of Arm Limited (or its subsidiaries) in the US and/or elsewhere.
- All other brand and product names are trademarks or registered trademarks of their respective holders.
- Illustrations in this manual may not exactly represent the actual product or display.

LED Backlight

- The LED backlight in this product has a limited lifetime.
  * If the screen gets dark or does not turn on, it may be necessary to replace the LED backlight.
  * This LED backlight is exclusive to this product and must be replaced by an authorized servicing dealer or service center. Please contact an authorized servicing dealer or service center for assistance.

MOUNTING PRECAUTIONS

- For SHARP dealers or service engineers, please confirm “Mounting Precautions (For SHARP dealers and service engineers)”.(See page 62.)
- This product is for use indoors.
- A mounting bracket compliant with VESA specifications is required.
- Since the monitor is heavy, consult your dealer before installing, removing or moving the monitor.
- Mounting the monitor on the wall requires special expertise and the work must be performed by an authorized dealer. You should never attempt to perform any of this work yourself. Our company will bear no responsibility for accidents or injuries caused by improper mounting or mishandling.
- Use the monitor with the surface perpendicular to a level surface.
- When moving the monitor, be sure to hold the handles or the parts marked by ▭ below. Do not grasp the screen or tray. This may cause product damage, failure, or injury.

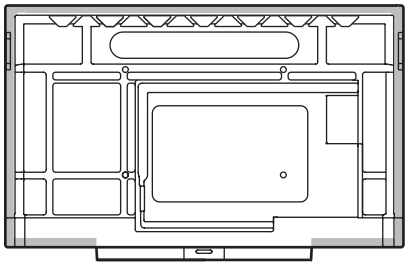

- This monitor should be used at an ambient temperature between 41°F (5°C) and 95°F (35°C). Provide enough space around the monitor to prevent heat from accumulating inside.

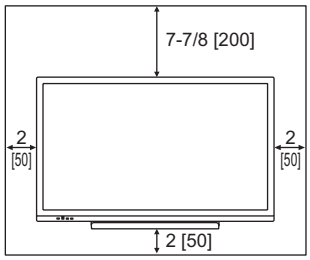

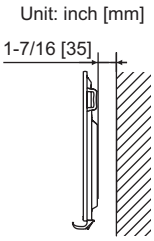

- If it is difficult to provide sufficient space for any reason such as the installation of the monitor inside a housing or of several units side-by-side, or if the ambient temperature may be outside of the range of 41°F (5°C) to 95°F (35°C), install a fan or take other measures to keep the ambient temperature within the required range.
- When installing two or more monitor units side-by-side, provide space of at least 3/16 inch (5 mm) around them to prevent stress on the adjacent unit or structure due to thermal expansion.
- Temperature condition may change when using the monitor together with the optional equipments recommended by SHARP. In such cases, please check the temperature condition specified by the optional equipments.
- Do not block any ventilation openings. If the temperature inside the monitor rises, this could lead to a malfunction.
- Do not place the monitor on a device which generates heat.
- Do not use the product in locations where the unit is exposed to direct sunlight or other strong light. Since this product operates with infrared rays, such light may cause a malfunction.
- When using multiple monitors closely, be sure the infrared transmitter/receiver does not affect the other ones.

Contents

IMPORTANT INFORMATION **3**
DEAR SHARP CUSTOMER **4**
SAFETY PRECAUTIONS **4**
TIPS AND SAFETY INSTRUCTIONS **6**
MOUNTING PRECAUTIONS **7**
Supplied Components **9**
System Requirements **9**
Part Names **10**
Connecting Peripheral Equipment **12**
Connecting the Power Cord **14**
Binding Cables **14**
Preparing the Remote Control Unit **15**
Installing the batteries 15
Remote control operation range 15
Mounting a web camera **16**
Attaching the wireless adapter **16**
Turning Power On/Off **17**
Turning on the main power 17
Turning power on 17
Turning power off 18
Sleep (Backlight off) 18
Touch Pen **19**
Touch action **20**
Touch action 20
Cautionary points 20
Basic Operation **21**
About the home screen of APPLICATION mode 21
Using the remote control unit 26
Overlay board (Annotation) 29
Freeze 30
Whiteboard **31**
Drawing 33
Erasing a drawn line 33
Selecting a drawn line 34
Opening a file or application on the current sheet 34
Opening a file 35
Saving 35
Settings 35
Wireless Display (EShare) **36**
File Manager **37**
PDF Viewer **41**
Web Browser **42**
Printing **43**
Updating the Software (Update) **44**
Menu Items **45**
Displaying the menu screen 45
Menu item details 46
Adjustments for computer screen display 52
Reset/Functional Restriction Setting (Function menu) **53**
Troubleshooting **54**
Specifications **56**
Intellectual Property Rights and Other Matters **61**
Mounting Precautions (For SHARP dealers and service engineers) **62**

Supplied Components

If any component should be missing, please contact your dealer.

- ☐ LCD Monitor: 1
- ☐ Remote control unit: 1
- ☐ Cable clamp: 3

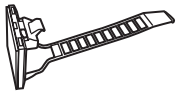

- ☐ Power cord
- ☐ Remote control unit battery: 2
- ☐ Setup Manual: 1
- ☐ Touch pen: 2
- ☐ Camera mount: 1
- ☐ Camera mount screw (M3x6): 1
- ☐ Camera screw (inch thread): 1

- ☐ Tray: 1
- ☐ Tray mounting screws (M3x8): 4
- ☐ USB cable: 1
- ☐ Wireless adapter: 1

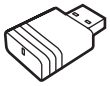

- ☐ Cover SHARP logo: 1
  Place this sticker onto the SHARP logo to cover the logo.

* **Please note**: do not dispose of batteries in household waste for environmental protection. Follow the disposal instructions for your area.

System Requirements

Hardware	Must have a USB 2.0 compliant port.
Operating system	Windows 10, Windows 11
	macOS v11, v12, v13
	Google Chrome OS Version 104 or later

To use the touch panel with an HDMI / D-sub / DisplayPort connection, connect the supplied USB cable to the computer.
The touch panel and touch pen operate with the standard driver of each operating system. On the Mac, operation is only possible in mouse mode.
The Information Display Downloader can also be downloaded from the following website.
https://www.sharp.eu/download-centre
When the Information Display Downloader is installed, you can check and download the most recent versions of the software programs.
To install the software, see the manual for each.
Pen Software setup program and Touch Viewing Software setup program can be downloaded using Information Display Downloader.

Part Names

■Front view

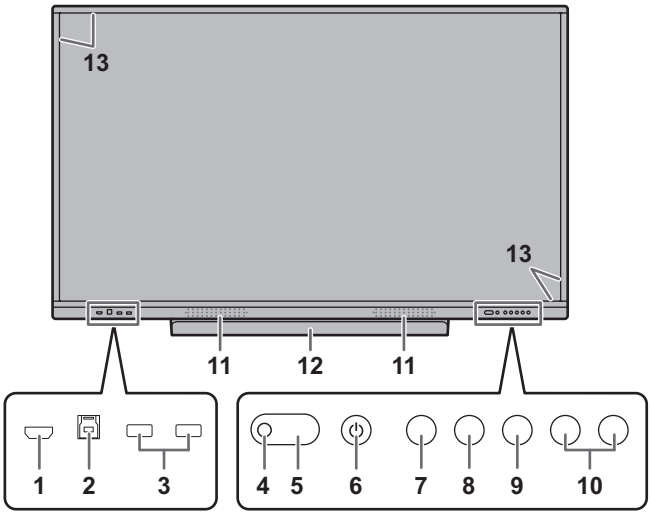

1. **HDMI1 input terminal** (See page 12.)
2. **TOUCH PANEL1 terminal** (See page 13.)
3. **USB port (USB 3.0 compliant)** (See page 13.)
4. **Remote control sensor** (See page 15.)
5. **Power LED** (See page 17.)
6. **POWER button** (See page 17.)
7. **HOME button** (See page 21.)
8. **FREEZE button** (See page 30.)
9. **INPUT button** (See page 23.)
10. **VOLUME +/- (Volume adjustment) buttons** (See page 22.)
11. **Speakers**
12. **Tray**
    The load capacity of the tray is 1 kg (2.2 lbs.).
13. **Infrared transmitter/receiver**

■Rear view

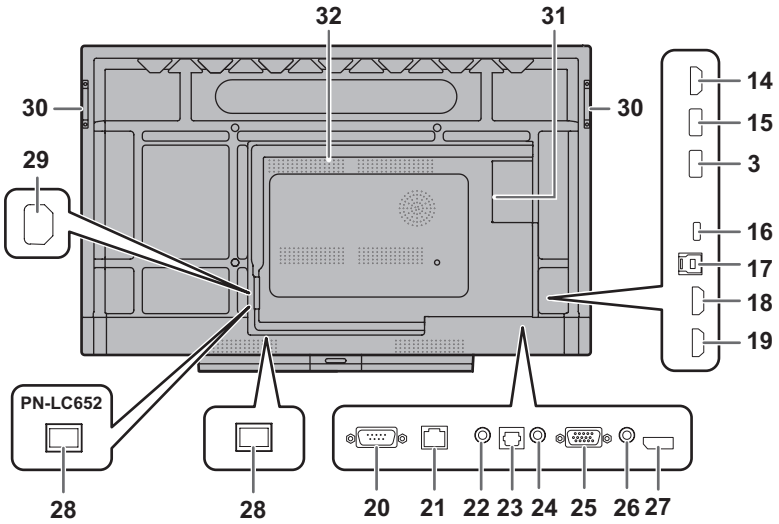

14. **HDMI output terminal** (See page 13.)
15. **USB port for APPLICATION mode (USB 3.0 compliant)** (See page 13.)
16. **USB Type C port** (See page 12.)
17. **TOUCH PANEL2 terminal** (See page 13.)
18. **HDMI2 input terminal** (See page 12.)
19. **HDMI3 input terminal** (See page 12.)
20. **RS-232C input terminal** (See page 13.)
21. **LAN terminal** (See page 13.)
22. **Audio output terminal** (See page 13.)
23. **Digital audio output (optical) terminal** (See page 13.)
24. **Audio input terminal** (See page 13.)
25. **D-sub input terminal** (See page 12.)
26. **Mini AV input terminal** (See page 12.)
27. **DisplayPort input terminal** (See page 12.)
28. **Main power switch** (See page 17.)
29. **AC input terminal** (See page 14.)
30. **Handles** (4 on the PN-LC862)
31. **Expansion slot**
    This section is used to connect optional hardware for function expansion. Offering this attachment location is not a guarantee that future compatible hardware attachments will be released.
    If a Windows computer is using the OPS slot, this monitor will not enter standby state while displaying the Windows Login screen.
    * If you turn off the monitor while OPS Module is in sleep mode, the OPS module may malfunction. Do not perform the following operations or settings on the OPS Module.
      • Go to sleep mode.
      • Turn off the monitor.
32. **Vents**

!Caution

- Consult your SHARP dealer for attachment/detachment of optional parts.

■Remote control unit

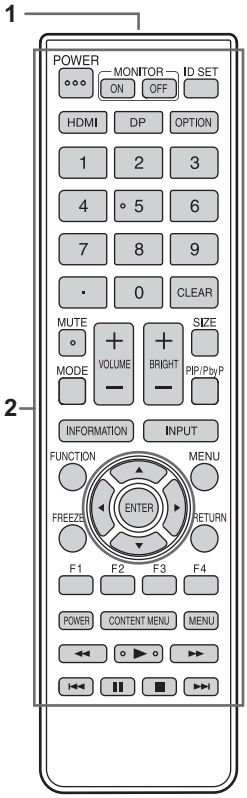

1. **Signal transmitter**
2. **Operation buttons** (See page 26.)

Connecting Peripheral Equipment

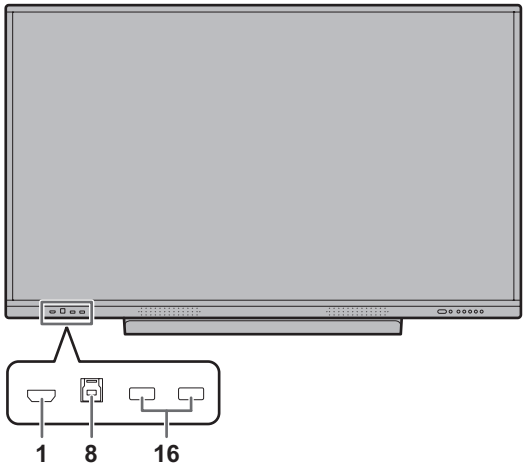

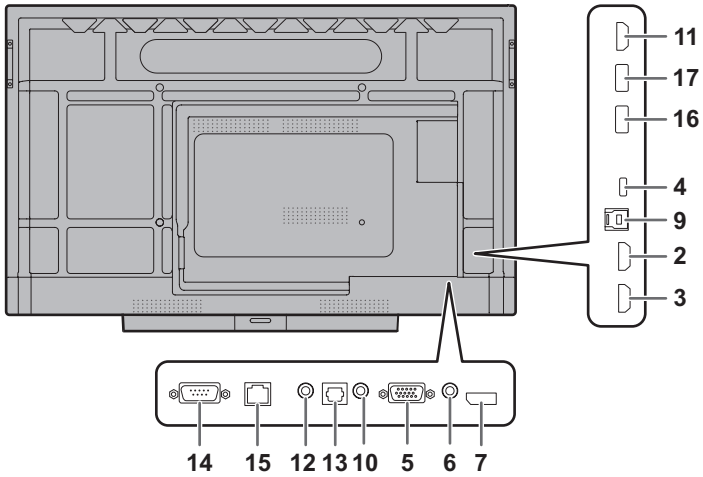

Caution

- Be sure to turn off the main power switch and disconnect the plug from the power outlet before connecting/disconnecting cables. Also, read the manual of the equipment to be connected.
- Be careful not to confuse the input terminal with the output terminal when connecting cables. Accidentally reversing cables connected to the input and output terminals may cause malfunctions and other problems.
- Do not use any cable that has a damaged or deformed terminal. Using such cables may cause malfunctions.

TIPS

- Operation is not guaranteed for all connected devices.
- Use the automatic screen adjustment when a computer screen is displayed for the first time using D-SUB or when the setting of the computer is changed. The screen is adjusted automatically using “Auto” on the Input menu.
- If the audio output from the playback device is connected directly to speakers or other devices, the video on the monitor may appear delayed from the audio portion.
  Audio should be played through this monitor by connecting the playback device to the monitor’s audio input, and connecting the monitor’s audio output to the speakers or other devices.
- Line speakers (connected to the audio output terminal), USB speakers, and Bluetooth speakers cannot be used at the same time.
  When connecting speakers, use only one of them.

The TOUCH PANEL terminal is USB3.0 Type B.
Although the connector shape is different, the supplied USB cable (USB 2.0 Type B) can be connected to the TOUCH PANEL terminal.

1. **HDMI1 input terminal**
2. **HDMI2 input terminal**
   - Use a commercially available HDMI cable (conforming to the HDMI standard) that supports 4K.
3. **HDMI3 input terminal (support ARC)**
   - Use a commercially available HDMI cable (conforming to the HDMI standard) that supports 4K. When connecting to ARC-compatible devices, please use cable that support even more ARC.
4. **USB Type C port**
   - Connect to the computer with a commercially available USB cable (Type C, conforming to the USB standard).
   - You can connect a device that supports DisplayPort alternate mode. In order to supply power to connected devices, it is necessary to support the Power delivery standard.
   - For USB Power Delivery 65W charging, please use a cable that supports a current rating of 5A. Charging is limited to 60W when using a cable that supports a current rating of 3A.
   - Be sure to clamp the USB Type C cable (commercially available) by using the supplied cable clamp (see page 14). When clamping the USB Type C cable, take care not to stress the USB Type C cable. Do not bend the USB Type C cable excessively.
   - There is no need to connect the USB cable to the TOUCH PANEL terminal.
   - When input mode is changed to USB-C, this monitor will be recognized by the connected computer.
5. **D-sub input terminal**
6. **Mini AV input terminal**
   - A conversion cable must be purchased separately.

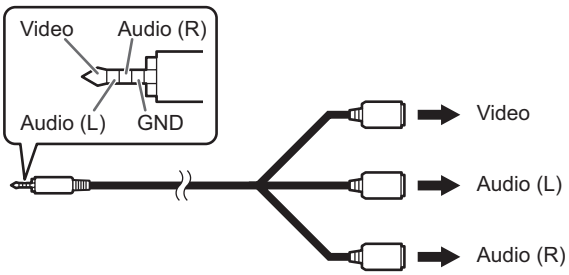

7. **DisplayPort input terminal**
   - Use a commercially available DisplayPort cable (conforming to the DisplayPort standard) that supports 4K.

8. TOUCH PANEL1 terminal
- To use the touch panel with a computer connected to an HDMI1 input terminal, connect the touch panel to the computer with a USB cable (USB2.0 Type B or USB3.0 Type B).

9. TOUCH PANEL2 terminal
- To use the touch panel with a computer connected to the video input terminal on the rear of the monitor, connect the touch panel to the computer with a USB cable (USB2.0 Type B or USB3.0 Type B).

10. Audio input terminal
- Use an audio cable without resistance.

11. HDMI output terminal
- The screen displayed on this monitor and the audio output from this monitor can be output to an external device.
- Use a commercially available HDMI cable (conforming to the HDMI standard) that supports 4K.
- When the input video is encrypted with copyright protection, the video cannot be output.
- When outputting the APPLICATION mode screen, the external device must support HDCP.

12. Audio output terminal
- Audio that is input into the monitor is output.
- The output sound varies depending on the input mode.
- When a cable is connected to the audio output terminal, audio is not output from the monitor speaker.
- “Bass”, “Treble”, and “Balance” cannot be adjusted in the “Audio” of the General menu.

13. Digital audio output (optical) terminal
- Audio that is input into the monitor is output.
- Connect using a commercially available audio digital cable.
- The output sound varies depending on the input mode.

14. RS-232C input terminal
- You can control the monitor from a computer by connecting a commercially available RS-232 straight cable between these terminals and the computer.
  For details, please refer to the manual on the following website.
  https://www.sharp.eu/download-centre

15. LAN terminal
- You can connect to a network by using a commercially available LAN cable.
- This monitor can be controlled via a network from a computer on the network. For details, please refer to the manual on the following website.
  https://www.sharp.eu/download-centre

16. USB port (USB 3.0 compliant, Type-A)
- When the input mode is HDMI1, the USB port can be used for a computer connected to the TOUCH PANEL1 terminal.
- When the input mode is HDMI2, HDMI3, DisplayPort or D-SUB, the USB port can be used for a computer connected to the TOUCH PANEL2 terminal.
- When the input mode is APPLICATION, the USB port can be used for APPLICATION mode.
- When the input mode is OPS, the USB port can be used for the computer of the expansion slot.

* Do not switch the input mode when a USB flash drive is connected. This could corrupt the data on the USB flash drive. Switch the input mode after removing the USB flash drive. To save data to the USB flash drive, connect the USB flash drive to the USB port for APPLICATION mode (see below).

17. USB port for APPLICATION mode (USB3.0 compliant, Type-A)
- The USB port can be used for APPLICATION mode. (The USB connection does not change even if the input mode is changed.)
- Connect to this port when using the wireless adapter (supplied). (See page 16.)

■USB port in the APPLICATION mode

- Connect USB devices (memory device, keyboard, mouse) that you want to use in APPLICATION mode.
  Supported USB flash drives

File System	FAT32
Capacity	Up to 64 GB (The maximum file size is 4 GB)

- A USB flash drive that is encrypted or has a security function cannot be used.
- Use a USB flash drive with a shape that can be inserted in the USB port. Some USB flash drives with special shapes cannot be inserted. Do not forcibly insert a USB flash drive. This may damage the connector or cause failure.

TIPS
- You can prohibit the use of USB flash drive. (See page 51.)

■How to remove a USB flash drive

1. Start “File Manager”. (See page 37.)
2. Select the USB flash drive to remove, and then touch **.**

TIPS
- To remove a USB flash drive connected to a computer, refer to the manual of the computer.

Connecting the Power Cord

Caution

- Use only the power cord supplied with the monitor.

1. Turn off the main power switch.
2. Plug the power cord (supplied) into the AC input terminal.
3. Plug the power cord (supplied) into the power outlet.

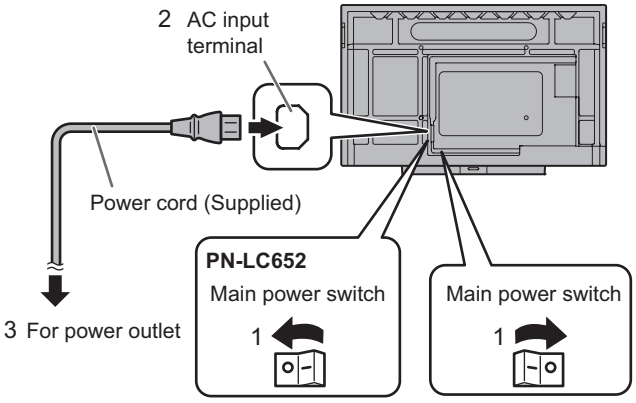

TIPS

- Be sure to clamp the power cord (supplied) by using the supplied cable clamp. When clamping the power cord, take care not to stress the terminal of the power cord. Do not bend the power cord excessively.

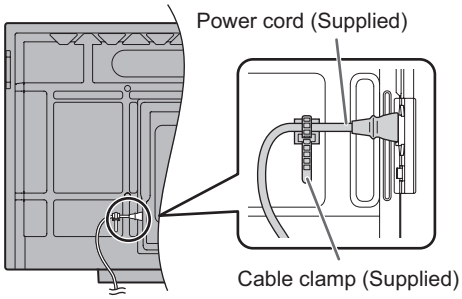

Binding Cables

The supplied cable clamps can be used to clamp the power cord and cables connected to the back of the monitor.

Attach the supplied cable clamps to a flat surface, removing any dust or dirt before attaching.
Do not attach over a vent.

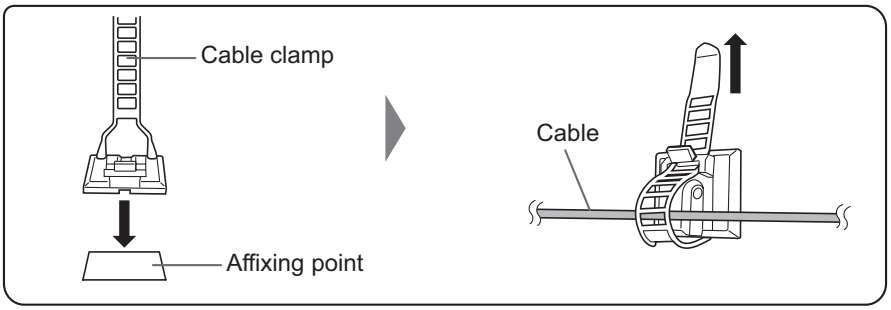

Preparing the Remote Control Unit

Installing the batteries

1. **Place your finger on the part marked with the ▲, and then pull the cover off.**

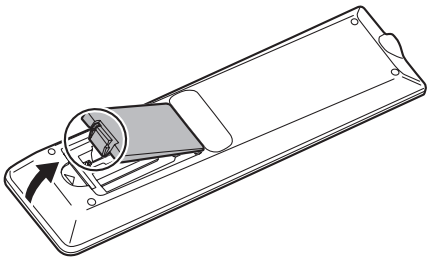

2. **See the instructions in the compartment and put in the batteries (R03 or LR03 ("AAA" size) x 2) with their plus (+) and minus (-) sides oriented correctly.**
3. **Close the cover.**

TIPS

- When the batteries become exhausted, replace them with new (commercially available) batteries.
- The supplied batteries may become exhausted quickly depending on how they are stored.
- If you will not be using the remote control for a long time, remove the batteries.
- Use manganese or alkaline batteries only.

Remote control operation range

The operation range of the remote control unit is approx. 16.4 feet (5 m) at an angle of approx 10° from the center to the top/bottom/right/left of the remote control sensor.

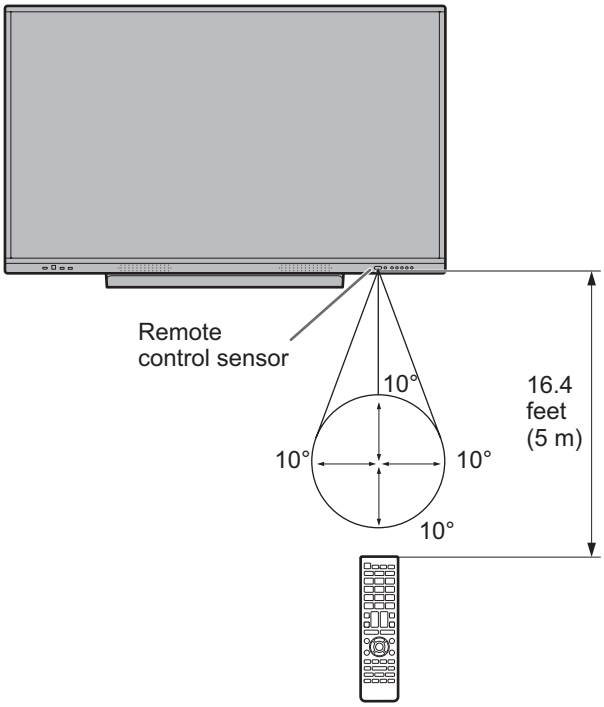

TIPS

- Do not expose the remote control unit to shock by dropping or stepping on it. This could lead to a malfunction.
- Do not expose the remote control unit to liquids, and do not place it in an area with high humidity.
- The remote control unit may not work properly if the remote control sensor is under direct sunlight or strong lighting.
- Objects between the remote control unit and the remote control sensor may prevent proper operation.
- Replace the batteries when they run low as this may shorten the remote control's operation range.
- If a fluorescent light is illuminated near the remote control unit, it may interfere with proper operation.
- Do not use it with the remote control of other equipment such as air conditioner, stereo components, etc.

Mounting a web camera

It is possible to mount the PN-ZCMS1 Video-Conferencing Soundbar (optional) or a commercially available web camera (1.1 kg (2.4 lbs.) or less).

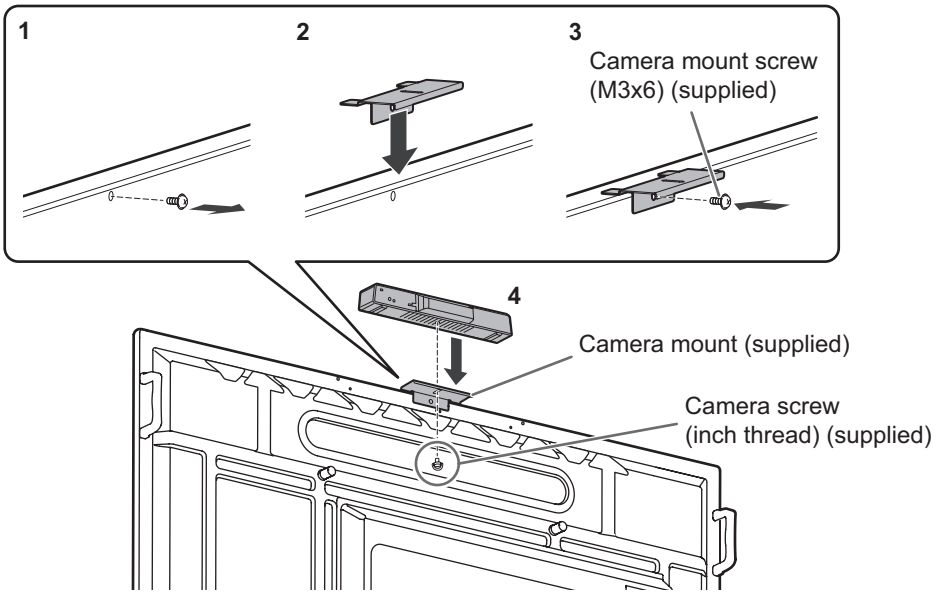

1. **Remove the screw from this monitor.**
2. **Place the camera mount (supplied) on top of this monitor.**
3. **Attach the camera mount (supplied) with the camera mount screw (M3x6) (supplied).**
4. **Attach the web camera on the camera mount with the camera screw (inch thread) (supplied).**

Caution

- Fix the camera mount and the web camera firmly. Dropping the camera mount or the web camera may cause product damage, failure, or injury.
- Remove the web camera when moving this monitor.

TIPS

- Store the removed screws.
  After removing the camera mount, put back the removed screws.

Attaching the wireless adapter

1. **Connect the supplied wireless adapter to the USB port for APPLICATION mode.**

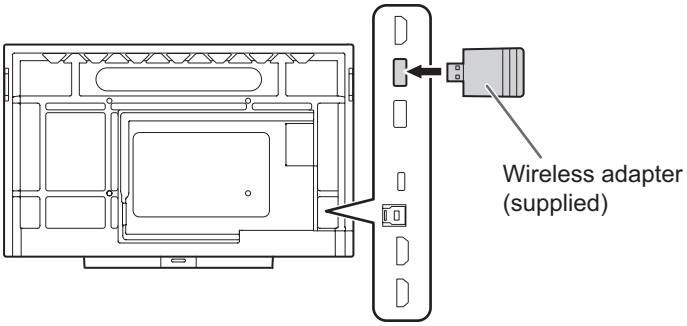

Caution

- When a wireless adapter is connected, please do not connect other USB device to the side USB port. That may cause malfunctions as the terminals may interfere with each other. Please use the front USB port for connecting other device.

Turning Power On/Off

Caution

- Turn on the monitor first before turning on the computer or playback device.
- When switching the main power switch or the POWER button off and back on, always wait for at least 5 seconds. A short interval may result in a malfunction.

Turning on the main power

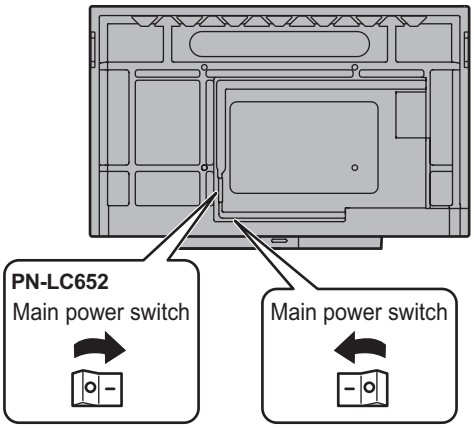

When you turn on the main power, the monitor enters standby state.

Off mode, when main power is off.

Caution

- The main power must be turned on/off with the main power switch. Do not connect/disconnect the power cord or turn the breaker on/off while the main power switch is on.
- For a complete electrical disconnection, pull out the main plug.

Turning power on

1. Press the POWER button.

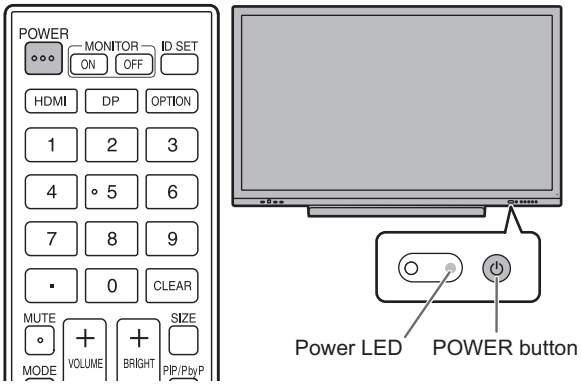

Status	Status of the monitor
Blue lit	Power on Sleep state (Backlight off)
Orange lit	Power off (Standby state*1)
Orange flashing (at approx. 2 seconds interval)	Power off (Standby state*2)
Orange flashing (at approx. 1 second interval)	Input signal waiting state

*1 When “Power save mode” is set to on.
Standby mode when “Wake On LAN” is set to off.
Networked standby mode when “Wake On LAN” is set to on.
Networked standby mode allows the monitor to be turned on via network (LAN, RS-232C, and HDMI CEC).

*2 When “Power save mode” is set to off.

TIPS

- When the main power switch is off, the monitor cannot be turned on.
- To disable the logo screen from displaying when turning the power on, set “Logo screen” to off on the Setup menu. (See page 46.)
- You can fix the input mode that appears after startup. Set “Start input mode” of “Others” on the Input menu. (See page 50.)

■Operations after first power-on

When you turn on the power for the first time, the language settings screen appears. Be sure to set the date and time.

1. **Select a language, and then touch “Next”.**
2. **Select the time zone, and then touch “Next”.**
3. **Set the date and time, and then touch “Next”.**
   The operation mode settings screen appears.
4. **Configure the settings according to the screen.**
   YES:
   - “Operation mode” is set to “Mode1”.
     “Mode1” is the recommended setting and conforms to the “Normal Configuration” as defined in the EcoDesign Regulation (2019/2021).
   - “Power management” is set to “Power standby” and “Power save mode” is set to on.
     These settings can not be changed.
   - “Wake On LAN” is set to off.
   - If there is no signal for approx. 5 minutes, this monitor automatically enters standby mode.
   - Current consumption is reduced while the monitor is in standby state. APPLICATION mode is also shut down. Note, however, that the startup time from standby state becomes longer.

   NO:
   - “Operation mode” is set to “Mode2”.
   - “Power management” is set to “Signal waiting mode” and “Power save mode” is set to off.
     These settings can be changed.
   - Move to input signal waiting state in the nosignal state.
   - Startup time from standby state is reduced. Note, however, that more power will be consumed in standby state. APPLICATION mode continues to run in standby state.

   Even after being set, you can change the “Operation mode”. (See page 46.)

The home screen of APPLICATION mode appears. (See page 21.)

TIPS

The clock stops if the main power remains off for about 3 days.*
(*Approximate time. The actual time varies depending on the state of the monitor.)

Turning power off

1. **Press the POWER button on the remote control unit.**
   Or, press and hold the POWER button on the monitor.

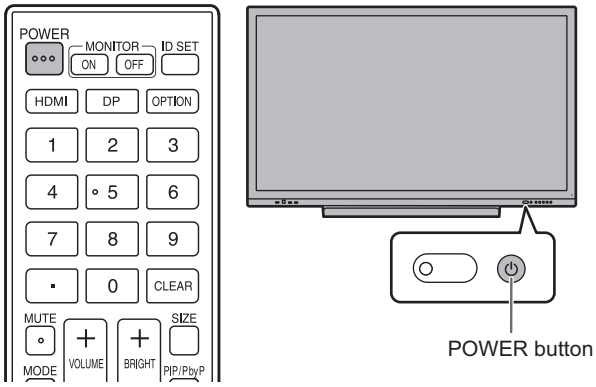

   A confirmation screen appears.
2. **Select “Power off”.**
   The power will turn off. (Standby state)

Caution

- When the power is turned off, the application data that is not saved is lost.
- A message is displayed before the power turns off. Save any data you need.
- If the monitor will be turned off by schedule, “Off if no operation” or computer control, save any data you need in advance. The power will turn off even if there is unsaved data. (The data will be lost.)

Sleep (Backlight off)

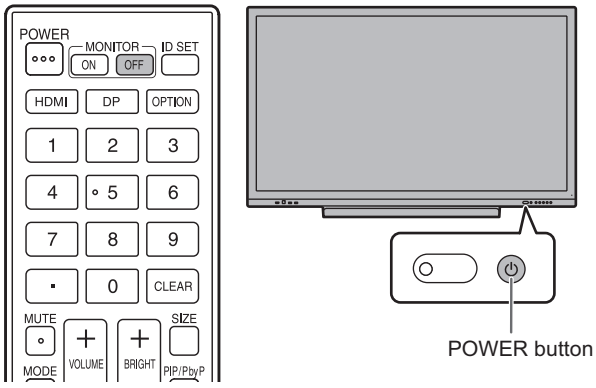

1. **Press the MONITOR OFF button on the remote control unit.**
   Or, press the POWER button on the monitor.
   The backlight will turn off.
   Does not output the sound.

The previous state can be restored by touching the screen or pressing any button (excluding MONITOR OFF, PIP/PbyP).

Touch Pen

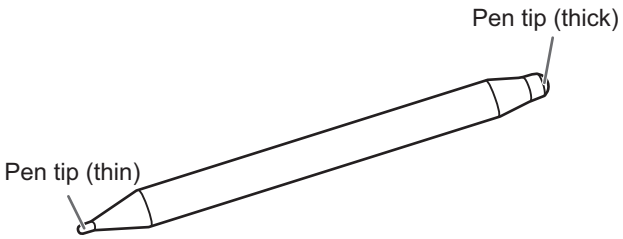

The following pre-installed software recognizes the side of the touch pen that is touching the screen, enabling the two sides to be used as different pens.

- Whiteboard

For details on how to use the touch pen in Whiteboard, refer to “Whiteboard” (see page 31).

TIPS

- When touching with the pen tip (thin), if the touch pen is tilted too much, it may be recognized as the pen tip (thick).
- In case of an overlay board (see page 29) and Whiteboard (see page 31), multiple touch pens can be used simultaneously. In other use cases, multiple touch pens cannot be used simultaneously.
- When multiple touch pens are used, lines may break.
  - When touched simultaneously.
  - When touch pens are moved near each other.
- If the pen tip becomes worn or damaged, replace the touch pen. To purchase a new touch pen, consult your dealer.

The supplied touch pen is attached to the marked positions on this monitor.

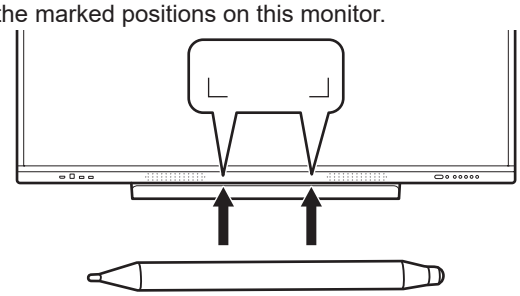

TIPS

- Do not attach anything other than the supplied touch pen.
- The touch pen has a built-in magnet. Do not move close watch or magnetic card to it.

Touch action

Touch action

Touch actions that can be used with this monitor differ according to operating system and application. The functions of touch actions are also different. For details, check operating system Help and the application's support documentation.

TIPS

- On the Mac, the actions are the equivalent mouse actions.
- For the procedures for using the touch pen in the Pen Software, see the Pen Software Operation Manual.
- The screen may not respond correctly in the following cases:
  - Touch gesture is too quick.
  - The distance between the two points is too short.
  - The two points intersect.
- In Windows 10/11, input panel functions can be used. For details, see Windows Help.
  Input panel: A software keyboard and an input panel with handwriting recognition appear on the screen.
- In Windows 10/11, the ink function of Microsoft Office can be used. Handwritten comments can be written, and handwriting can be recognized.
  For details, see Microsoft Office Help.

Cautionary points

- Do not use the touch pen for any purpose other than touch panel operation.
- Do not press hard on the pen tip.
- Operation will not take place correctly if there is an obstacle between the infrared transmitter/receiver and the touch pen or your finger. Operation will not take place correctly if your fingers or your sleeve is near the screen.
- When touching with the touch pen, if the touch pen is tilted too much, the touch position may not be correctly detected.
- If the touch pen does not work at the edge of the screen, move it slowly.
- This may not operate correctly if there is an inverter fluorescent light nearby.
- If there is dirt or foreign matter on the tip of the touch pen, remove it. Foreign matter may damage the screen.
- The touch pen position may occasionally deviate in the login screen. In this case, use the keyboard or mouse.
- If the USB cable becomes disconnected, the touch panel may not operate correctly after the USB cable is reconnected. In this case, restart the computer.
- When removing the pen tip or your finger from the screen, remove a sufficient distance. If the distance is not sufficient, a touch may be detected even if the screen is not touched.

Basic Operation

About the home screen of APPLICATION mode

This screen appears when the HOME button is pressed or the input mode is changed to APPLICATION.

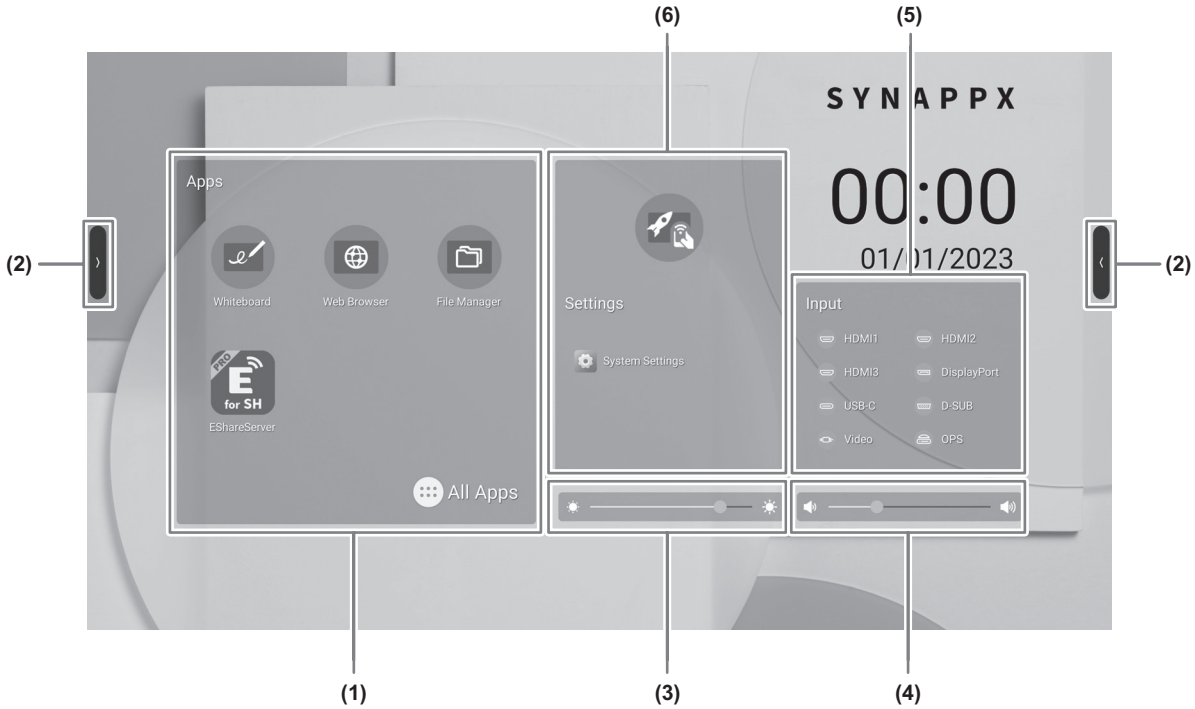

(1) Start “Whiteboard”. (See page 31.)

Start “Web Browser”. (See page 42.)

Start “File Manager”. (See page 37.)

Start “EShareServer”. (See page 36.)

Display the list of applications.

- Start “Web Browser”. (See page 42.)
- Start “File Manager”. (See page 37.)
- Start “EShareServer”. (See page 36.)
- Take images or videos when the web camera is connected.
- Start “Timer”.
  - This can be used as a countdown timer by setting the time and touching it.
    This can be used as a stopwatch by touching it without setting the time.
  - Resets the elapsed time.
  - Timer is displayed in full screen.
  - Switches the Alarm ON/OFF.
  - Exit “Timer”.
- Start “Calendar”.
  Touching “Capture to Whiteboard” will display the Whiteboard incorporated with the Calendar.
- Start “Calculator”.

Vote and count using the internet.
After setting the subject and options, a QR code will appear.
Scan with a device such as a smartphone and vote on the displayed page.
Touch “END VOTING”, the result will be displayed.
The result can be saved as image file or inserted into Whiteboard.

Start “Screen Record”. Records the screen displayed on this monitor.
Set recording settings in “Screen record” of General menu. (See page 49.)

Starts the recording. Pauses recording.

Stops recording and displays the file storage screen.

“Screen record” is displayed in small size.

Exit “Screen Record”.
If something was recorded, make sure to save your data. Displays the file storage screen.
To play the recording, select the data stored via “File Manager”.

Start “Updater”. (See page 44.)

Display the setting menu. (See page 45.)

Start “Whiteboard”. (See page 31.)

(2) When you touch the screen, “〉” and “〈” appear.
Touch to view the sidebar.

Go back to previous screen.

Return to home screen of APPLICATION mode.

Display a preview of the application being executed.

Start “Overlay board”. (See page 29.)

Display “Control Panel”. (See page 24.)

Display “Input” menu. (See page 27.)

(3) Adjust the brightness.

(4) Adjust the volume.

(5) Change the input mode.

Input mode	Video	Audio
APPLICATION	APPLICATION	APPLICATION
HDMI1	HDMI1 input terminal	HDMI1 input terminal
HDMI2	HDMI2 input terminal	HDMI2 input terminal
HDMI3	HDMI3 input terminal	HDMI3 input terminal
DisplayPort	DisplayPort input terminal	DisplayPort input terminal
USB-C	USB Type C port	USB Type C port
D-SUB	D-sub input terminal	Audio input terminal
Video	Mini AV input terminal	Mini AV input terminal
OPS	Expansion slot	Expansion slot

The icon of the terminal that is not connected is grayed out.

(6) Switch the input mode to a computer on which “Synappx” is installed. *

Display the setting menu. (See page 45.)

* When “Synappx setting” on the Setup menu is set to on, icon is displayed. Set which input mode to switch in “Input for Synappx”.
When use the Chromecast device in Synappx, set “Support Chromecast device” to on. (See page 36.)
When use the Miracast device in Synappx, set “Support Miracast device” to on. (See page 36.)
When use the Telnet in Synappx, set “Monitor Control via Network” to on. (See page 47.)
Synappx applications work with your current office technology to bring smart home convenience into the workplace.
Have a smooth meeting. Share or print information right where it’s needed. For details on Synappx, see the Synappx manual.

TIPS

- When a confirmation screen to allow access appears when the application is started for the first time, select “Allow”.
- When “Color Universal Design” is set to on, is displayed.

■List display of startup applications (recent app bars)

When you touch on the sidebar, display a preview of the application being executed.

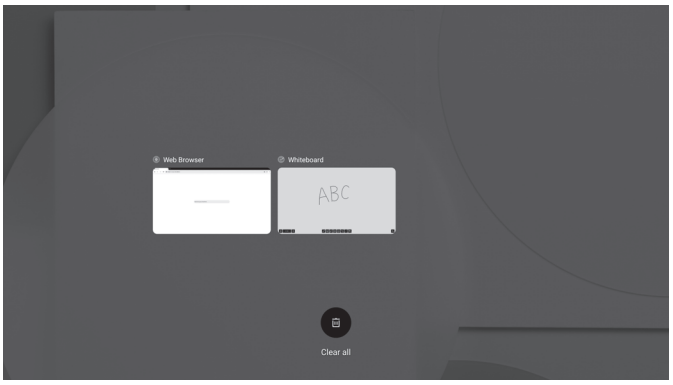

- When you touch the preview, the display switches to that application.
- Swipe up on the preview to exit the application.
- Touch and hold to exit all applications.

■Control Panel

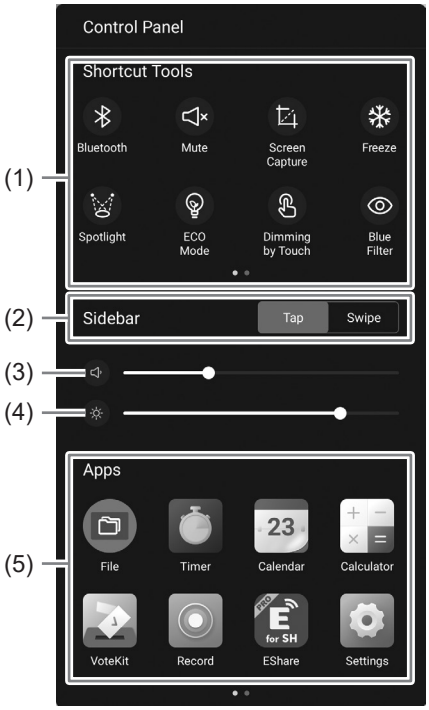

(1) Shortcut Tools

Various operations can be performed.

: Turns Bluetooth on/off when attaching a wireless adapter.

: Temporarily mutes audio.
Touching again will return it back to the original volume.

: Save the image of the display of the dragged area, or import it in to the Whiteboard.

: Displays a still image of what is displayed on this monitor. (See page 30.)

: Hides the entire screen and displays only the touched areas.

: Turning this on will fixate the screen brightness to 25. This turns off when you adjust the screen brightness.

: Turning on will dim the screen brightness when touched. Reduces screen brightness during operation. The screen will return to the original brightness about 5 seconds after being touched.

: Turns the low blue light display on/off.

: Turn off the screen display (backlight off) and output only the sound.

: Lock the screen.
If you want to lock the screen, “Screen lock” is set to on and set the unlock method. (See page 51.)

: Turn off this monitor.

: Restart APPLICATION mode.

: Turns off the power of the expansion slot device.

(2) Sidebar
Set how the sidebar is displayed.
Tap: Touch the screen.
Swipe: Swipe inward from the outside of the screen (from either left or right).
(3) Adjust the volume.
(4) Adjust the brightness.
(5) Apps
Display the applications installed on this monitor.

■Compass

“Compass” on the General menu is set to on to use the Compass. (See page 48.)

1. Touch .

- A shortcut will appear.

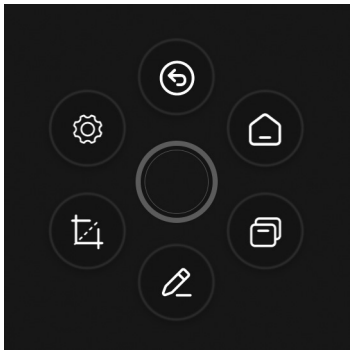

- Touch to close the shortcut.
- will appear when you long press the screen using 5 fingers when “Actions” is set to “Fade away”.

2. Touch the shortcut you want to use.

: Go back to previous screen.
: Return to home screen of APPLICATION mode.
: Display a preview of the application being executed.
: Start “Overlay board”. (See page 29.)
: Save the image of the display of the dragged area, or import it in to the Whiteboard.
: Display the setting menu. (See page 45.)

Factory setting. This setting can be changed. (See page 49.)

TIPS

- Drag to move the Compass.

Using the remote control unit

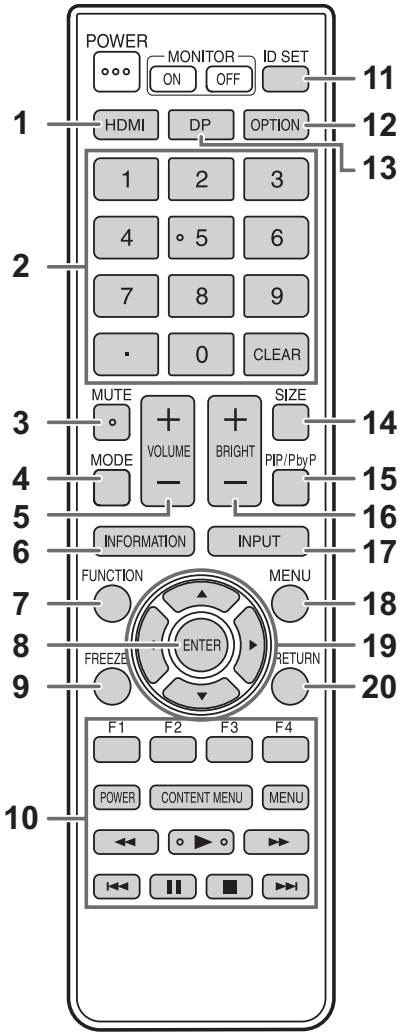

1. HDMI
Switch the input mode to HDMI1, HDMI2 or HDMI3.

2. Numeric input buttons
These buttons are used for setting such as LAN setting.

3. MUTE
Turns off the volume temporarily.
Press the MUTE button again to turn the sound back to the previous level.

4. MODE (Color mode selection)
In video input mode (other than “APPLICATION”), the color mode changes.
The menu is displayed.
Press the ▲ or ▼ button to select the color mode.
- High Illuminance is a display with colors suited to bright locations.

5. VOLUME +/- (Volume adjustment)
Press + or - to adjust the volume.

6. INFORMATION
Displays monitor information.

INFORMATION1	01/01/2023 Sun 00:00:12
Input Mode	:APPLICATION
Size	:Wide
Color Mode	:Standard
Bright	:80
Volume	:30
Input signal information	:3840x2160@60Hz
Model	:XX–XXXXX
Version	:X.X.X
S/N	:XXXXXXXXXXXXXXXXXXXXXXXX
Status	:XXXX–XXXXXX–XX–XXXX

INFORMATION2	01/01/2023 Sun 00:00:15
Network Path	:Ethernet
DHCP Client	:On
IP Address	:XXX.XXX.XXX.XXX
Subnet Mask	:XXX.XXX.XXX.XXX
Default Gateway	:XXX.XXX.XXX.XXX
MAC Address(Ethernet)	:XXX.XXX.XXX.XXX
MAC Address(Wireless LAN)	:---

The display changes from “INFORMATION1” → “INFORMATION2” → clear display, and so on every time you press this button.
When displaying “INFORMATION”, the display changes from “INFORMATION1” → “INFORMATION2” → “INFORMATION1”, and so on every time you press the ▶ button.
Pressing the RETURN button disappears the display.
- The display disappears automatically after about 15 seconds.

7. FUNCTION
Display the Function menu. (See page 53.)

8. ENTER
Confirms the setting.

9. FREEZE
Freezes the video shown on the monitor. (See page 30.)
In some cases a residual image may occur. Do not freeze the video for a long time.

10. Buttons for playing the files or operating the HDMI-connected device

When used for playing the files, the buttons that can be used vary depending on the file that is played.
When “HDMI CEC link” is set to on, you can operate devices that support HDMI CEC when the input mode is HDMI.

CONTENT MENU button

- When input mode is APPLICATION
  - The home screen of APPLICATION mode appears.
- When “HDMI CEC link” is set to on and input mode is HDMI
  - Operate devices that support HDMI CEC.
- When “HDMI CEC link” is set to off and input mode is other than APPLICATION
  - The input mode changes to APPLICATION.

11. ID SET

This is not used with this monitor.

12. OPTION

Switch the input mode to APPLICATION or OPS.

13. DP (DisplayPort)

Switch the input mode to DisplayPort or USB-C.

14. SIZE (Screen size selection)

In video input mode (other than APPLICATION), each time you press this button, screen size is changed. (See page 28.)

15. PIP/PbyP

This is not used with this monitor.

16. BRIGHT +/- (Brightness adjustment)

Press + or - to adjust the brightness.

17. INPUT (Input mode selection)

The menu is displayed.

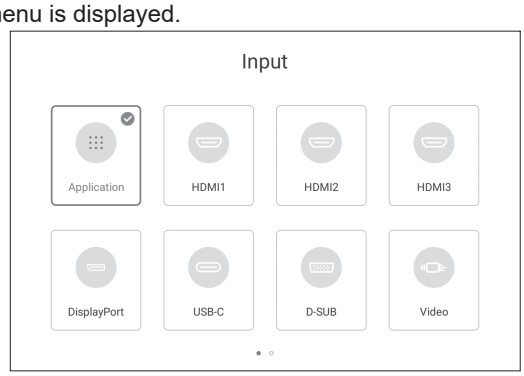

Press the ▲ ▼ ◀ or ▶ button to select the input mode, and press the ENTER button to enter.

- For the input modes that can be selected, see “About the home screen of APPLICATION mode” (see page 23).

18. MENU

The “Picture” screen of the General menu is displayed. (See page 48.)

19. Cursor

These buttons are used to perform operations such as selecting items, changing adjustment values, and moving the cursor.

20. RETURN

Returns to the previous screen.

■Switching the screen size

Even when the screen size is changed, the display may remain the same depending on the input signal.

Wide	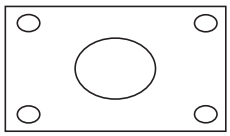	Displays image so it fills the entire screen.
4:3*	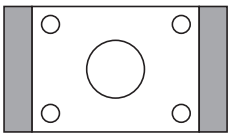	Displays the image with an aspect ratio of 4:3. Use with 4:3 signals such as 640 × 480, 800 × 600, or 1024 × 768. When showing such as 16:9 video, the width of the image will be shrunk.
Dot by Dot	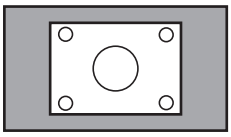	Displays the dots of the input signals as the corresponding dots on the screen.

* Do not appear when the input mode is D-SUB.

TIPS

- Using this monitor's screen-size switching function to compress or expand the screen for commercial or public viewing in establishments like cafes or hotels may infringe on the rights of the creators, as protected by Copyright Law, so please be careful.
- The appearance of the original video may change if you select a screen size with a different aspect ratio than the original image (e.g. TV broadcast or video input from external equipment).
- When playing commercial software, parts of the image (like subtitles) may be cropped. In this case select the optimal screen size using the screen-size switching function of this monitor. With some software, there may be noise or distortion at the edges of the screen. This is due to the characteristics of the software, and is not a malfunction.
- Depending on the original video size, black bands may remain at the edges of the screen.

Overlay board (Annotation)

You can draw characters or lines on the images being displayed on this monitor.

Touch on the sidebar or Compass.

In this application, the data of one screen is referred to as a “sheet”.
A maximum of 20 sheets can be opened.

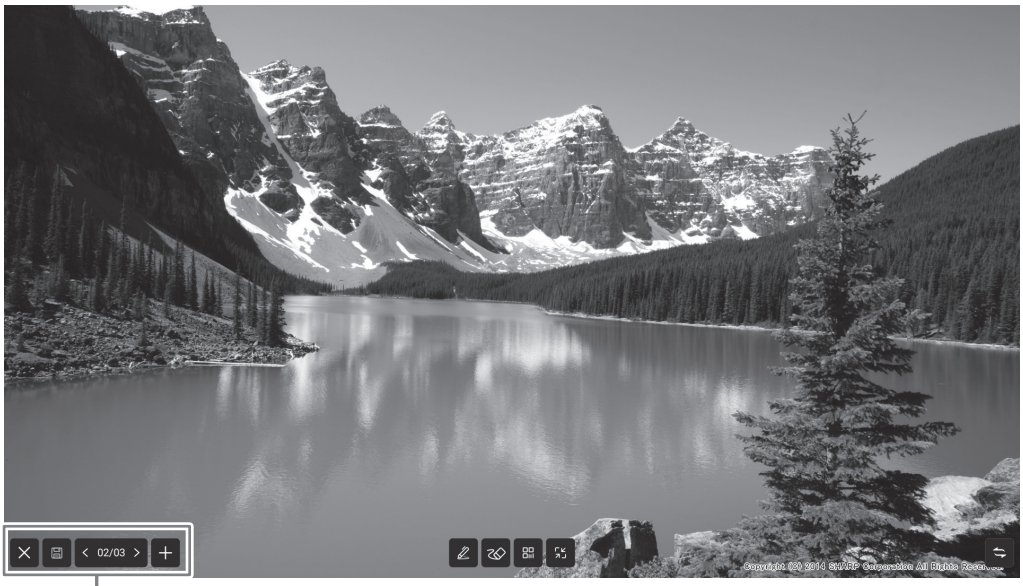

: Switches the display position to the left and right.

Tool	Function
	Draws a line. You can change the settings (color, opacity, thickness).
	Erase a line that you drew. : The lines in the touched areas will be erased. : The lines in the dragged area will be erased. Lines will be completely erased if even some of their portions are contained inside the said area. Clear : All lines on the sheet will be erased. Slide the switch to the right.
	Display an image of the screen that is currently displayed on this monitor on a device such as a smartphone via the internet. Scan the QR code displayed. A password can be requested when displaying image. Touch “ENCRYPTION” and enter the displayed password.
	Minimize the overlay board. The minimized overlay board can be redisplayed by touching of sidebar or Compass.
	Add a sheet.
02/03	Shows the current sheet number and the total number of sheets. You can change the sheet displayed with or .
	Save the sheet as an image file or PDF file. Data will be stored in “/Annotation”.
	Exit the application.

You can erase an area of the screen that you touch with your palm.
Touch the screen with your palm, and when the cursor is appear, move your palm.

TIPS

- Cannot be saved when HDCP-compliant images input from the HDMI input terminal / DisplayPort input terminal / USB Type-C port / OPS are being displayed.

Freeze

Freezes the video shown on the monitor.

Either press the FREEZE button on the remote control unit, or touch on the sidebar and touch .

In the case of a still image, is displayed at the top left of the screen.

Settings window

Settings window:

Touch to operate.

The overlay board will be displayed. (See page 29.)

Cancel the still state.

Caution

- In some cases a residual image may occur. Do not freeze the video for a long time.

TIPS

- If you want to mute the audio from a still image, set “Mute with freeze” on the General menu to on.
- To cancel, press any button other than the POWER button, MUTE button or VOLUME button on the remote control unit. Freeze is also canceled when the input signal changes (switching to no signal, changing the resolution, etc.).

Whiteboard

- You can write letters or draw lines on the screen as a whiteboard.
- You can print or save content written on the screen.
- You can display an image or PDF file, and write/draw letters and lines on the image.
- In this application, the data of one screen is referred to as a “sheet”.
- A maximum of 20 sheets can be opened.

1. On the home screen of APPLICATION mode, touch “Whiteboard”.

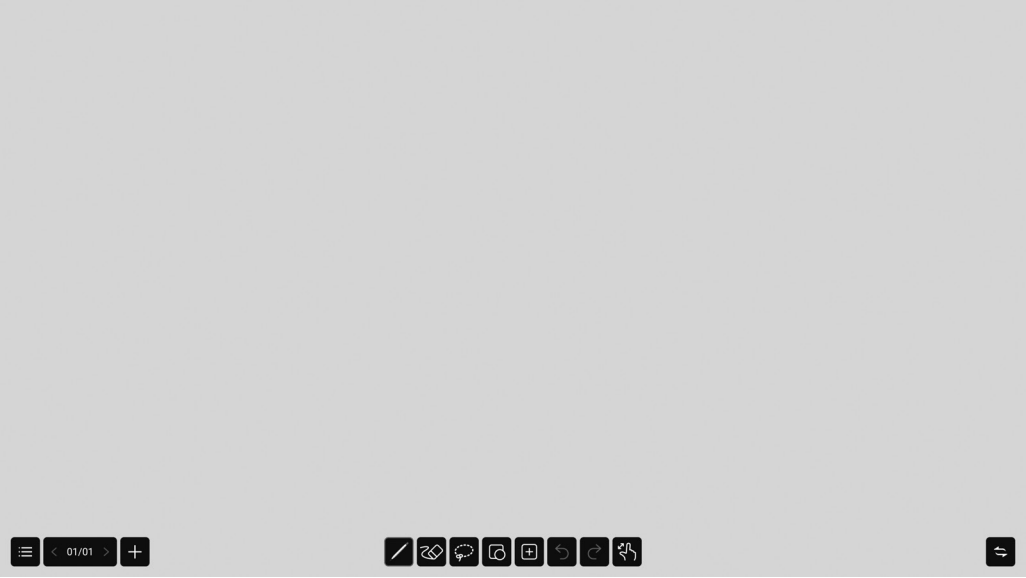

Caution

- When the power is turned off, any data in Whiteboard is lost.
- A message is displayed before the power turns OFF. Save any data you need.

■Function list

Tool	Function
	Draw lines. (See page 33.)
	Erase a line that you drew. (See page 33.)
	Select a drawn line. You can move, zoom in on, or zoom out on the selected line. (See page 34.)
	Draw a figure. After selecting a figure, drag an area to include the figure.
	Insert the file on the sheet. You can also call up an application. (See page 34.)
	Undo the previous drawing or edit. You can repeat undo a maximum of 20 times.
	Redo an undone action.
	Selects the behaviors of the multi-finger operation. It changes every time you touch it. When set to off, each can be used for drawing (maximum 20). When set to on, it can be zoomed in/out by pinching. The display position can be moved by dragging it with 3 fingers.
	The menu will appear. Touch again to close the menu.
	Close the current whiteboard and create a new whiteboard. A message appears if the current whiteboard has not been saved. Save the whiteboard you need.
	Open the whiteboard.
	Save the whiteboard.
	Save the whiteboard as a different whiteboard.
	Display an image of the screen that is currently displayed on this monitor on a device such as a smartphone via the internet. Scan the QR code displayed. A password can be requested when displaying image. “Encryption” is set to on and enter the displayed password.
	Print a sheet. (See page 43.)
	Change the settings of this application. (See page 35.)
	Exit this application.
01/01	Shows the current sheet number and the total number of sheets. You can change the sheet displayed with < or >. Touching this will zoom out all sheets. The sheet can be moved or deleted.
	Add a new sheet behind the currently displayed sheet.
	Switches the display position of the menu and sheet number to the left and right.

Drawing

The side of the touch pen (supplied) that is touching the screen, enabling the two sides to be used as different pens.

1. Touch .

The line setting (color, thickness, opacity, nib) can be changed.

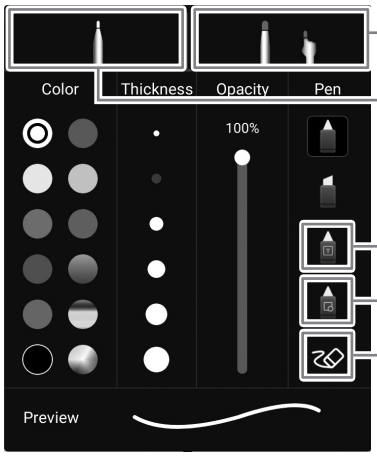

Configure the settings for drawing with the thick nib of the touch pen (supplied) or finger.

Configure the settings for drawing with the thin nib of the touch pen (supplied).

Recognizes and formats the drawn characters.*1

Recognizes and formats the drawn figures. *2

Erasing a drawn line.

2. Draw.

TIPS

- Depending on the drawn shape, it may not be correctly formatted.
  - *1 Write the characters in one line. Even if you write characters in multiple lines, they will be formatted in one line.
    The recognized characters differ depending on the “Language” setting of “Language & keyboard” in the System menu.
  - *2 Recognizes straight lines, circles, arrows, triangles, rectangles and star shapes.
    Arrows, triangles, rectangles and star shapes will not be recognized if drawn diagonally. Draw it horizontally or vertically, and rotate it after it is recognized.

Erasing a drawn line

1. Touch .

: The lines in the touched areas will be erased.

: The lines in the dragged area will be erased.
Lines will be completely erased if even some of their portions are contained inside the said area.

: All lines on the sheet will be erased.
Slide the switch to the right.

You can erase an area of the screen that you touch with your palm.
Touch the screen with your palm, and when the cursor is appear, move your palm.

Selecting a drawn line

Select a drawn line.
Selected lines can be moved, enlarged/reduced and rotated.

1. Touch .
2. Select a line. (See below.)

Selection method:

Touch a line.

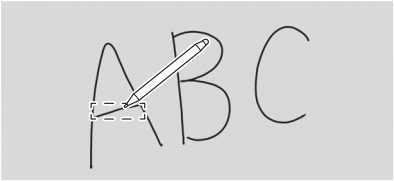

Trace over the line you wish to select.

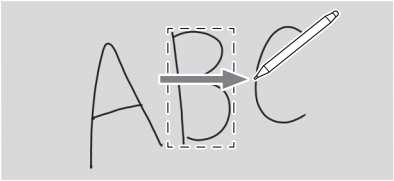

Enclose the line you wish to select.

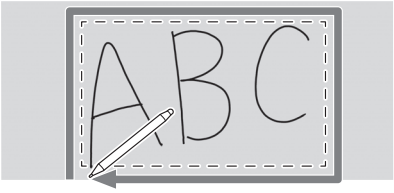

Opening a file or application on the current sheet

Depending on memory usage and other factors, it may not be possible to open a file even if it is in a supported format.

1. Touch .
2. Insert.

: Insert an image file.

: Set the number of rows and columns and insert the table.
The table width and height are automatically adjusted when drawn within the table.
Rows and columns can be added by selecting the table using the selection tool.

: The Web Browser appears.
Long pressing an image displayed in the Web Browser will incorporate the image into the sheet.

: Vote and count using the internet. (See page 22.)

: Displayed the Timer.

: Transfers the screen of a mobile device such as a smartphone and incorporates it into the sheet.

Opening a file

Data of this application that is saved is opened as a new whiteboard.
The current whiteboard closes. The whiteboard data that is not saved is lost.

1. **Touch , .**
   If the current whiteboard has not been saved, a confirmation screen is appear. If you need it, touch “Yes” and save.
2. **Select the file.**

Saving

You can save the whiteboard to this monitor’s built-in memory (internal memory) or to a USB flash drive.
You can save in formats other than the source file format such as in a PDF or an image format.

TIPS

- When you save a sheet in PDF format or image, the sheet cannot be re-edited using this application.

Save as new

1. **Touch , .**
2. **Specify the file name, save format, and save location (when connected to a USB flash drive).**
3. **Touch “Save”.**

TIPS

- Data will be stored in “/whiteboard”.

Overwrite

Data that have not been saved even once in the source file format will be saved as new.

1. **Touch , .**
2. **Touch “Yes”.**

Settings

1. **Touch , .**
2. **Configure the setting.**
   Time display switch:
   Configures whether or not to display the time on the upper right area of the screen.
   Background Settings:
   Set the whiteboard background.

Wireless Display (EShare)

- You can display the image of another device on the same network on this monitor. Connect the monitor (with a wireless adapter connected) and the device to the access point of the network or wireless router.
  You can write/draw letters and lines on the image displayed on this monitor using Overlay board.
- Software must be downloaded to the other device.
  For details, see below.
- Connections to all devices is not guaranteed.

Supported devices:

Windows	Windows 10 or later
Chrome OS*1	Eshare: Chrome OS version 87 or later*2 Must support Google Play. Google Cast: Chrome OS version 92 or later
macOS	macOS v10.15 or later
Android*1	Android 9 or later
iOS/iPadOS*1	iOS 14 or later iPadOS 14 or later

*1: Touch operation cannot be used.
*2: Audio cannot be sent.

■Wireless LAN connection settings

"Wireless LAN" on the Network menu is set to on and connect to an access point. (See page 47.)

■Start EShareServer

To use this application, it is necessary to authenticate. Uses the Internet for authentication. Therefore, when starting this application for the first time, connect this monitor to the Internet.

1. Touch in the home screen of APPLICATION mode.

■Display the image that appears on the other device

The following explanation uses Windows (device) as an example.

1. Access the address shown in EShare on the monitor with your browser, and download the software to the other device whose image is to be displayed.
A warning screen may be displayed, but continue downloading.

2. Install and start the software you downloaded.

3. Check the name of the display shown in EShare on the monitor and click "Connect".

4. Select "Share screen".
- You can select "Screen Mirror" (Windows) or "TV Mirror" (Android) to display the image that appears on the monitor on the other device.
- The other device connects to the monitor, and the image from the other device appears on the monitor.

5. Start Overlay board.
You can draw on the displayed image and save the displayed image.

TIPS

- The manual for this application can be downloaded from our website. (Provided only In English.)
  https://www.sharp.eu/download-centre

File Manager

Manages the files and folders in the internal storage and the USB flash drive connected to the monitor.
You can also display or play back the files.

1. On the home screen of APPLICATION mode, touch “File Manager”.

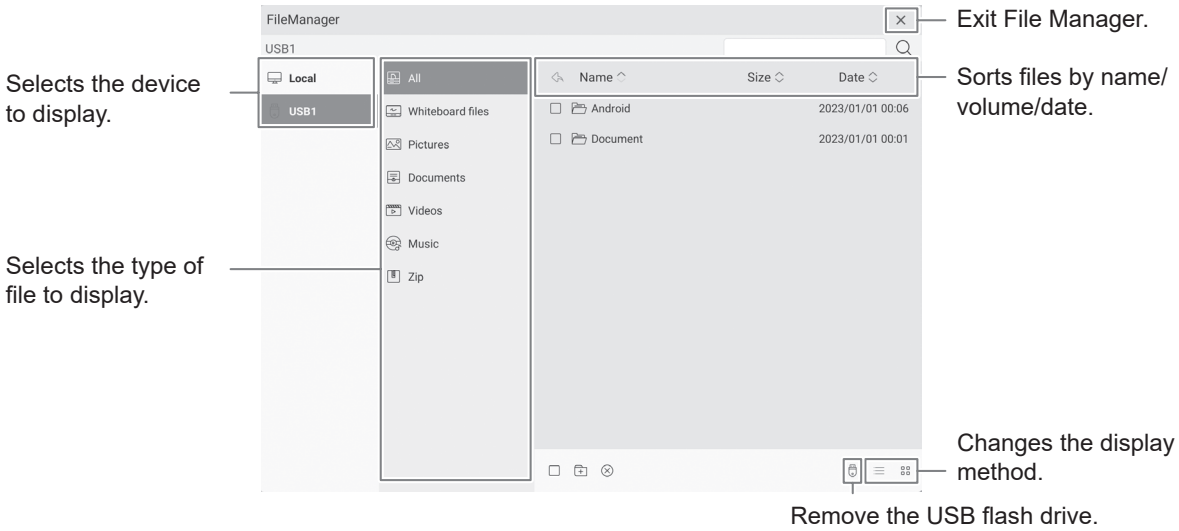

■File operation

Creating a new folder

1. Touch .
A dialog box for the input of the folder name appears.

2. Input the folder name.

3. Once input is complete, touch “OK”.

Copying/Moving

1. Display the file/folder to be copied/moved.

2. Touch to select the file/folder to be copied/moved.
- You can even select multiple files/folders.
  You can select all files/folders with at the bottom.

3. Touch or .

4. Display the file list of the copy/move destination.

5. Touch .
The file/folder is copied/moved.

Deleting

1. Display the file/folder to be deleted.

2. Touch to select the file/folder to be deleted.
- You can even select multiple files/folders.
  You can select all files/folders with at the bottom.

3. Touch .
A confirmation screen appears.

4. Touch “OK”.

Renaming

1. **Display the file/folder to be renamed.**
2. **Touch to select the file/folder to be renamed.**
3. **Touch .**
4. **Enter the new name, and then touch “OK”.**

■File display/playback

Image files

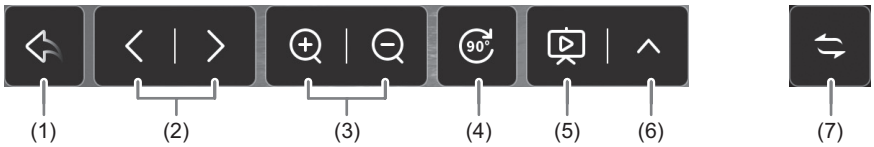

(1) Returns to the list of files.
(2) Displays the previous/next image.
(3) Zoom in/out on the image.
You can also zoom in/out by pinching.
(4) Rotates the image by 90°.
(5) Starts the slide show. Sequentially displays the images inside the same folder.
Ends the slide show.
(6) Configures the slide show
Play in loop: Configures whether to repeat playbacks.
Play interval: Configures the playback interval.
(7) Horizontally moves the display position of the operation bar.

Music files

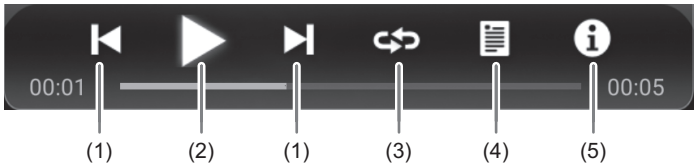

(1) Plays the previous/next music.
(2) Plays the music. Pause the playback.
(3) Plays a music repeatedly.
It changes every time you touch it.
Sequentially plays the music on the list, and when the last music is played, it starts all over from the first music.
Repeatedly plays the music that is currently being played.
Randomly and repeatedly plays the music on the list.
(4) Displays a list of music files in the same folder.
When a music is chosen from the list, it plays that music.
(5) Displays information about the music.

Video files

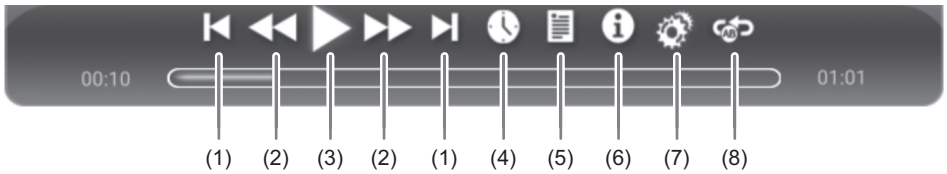

(1) Plays the previous/next video.
(2) Change the speed of video playback.
(3) Plays the video. Pause the playback.
(4) Moves the play position to the specified time.
(5) Displays a list of video files in the same folder.
(6) Displays information about the video.
When a video is chosen from the list, it plays that video.
(7) Configures settings related to video playback.
(8) Repeats the playback at the specified position.
1) “Section replay” is set to on.
2) Touch “Set starting point A” at the repeat start position.
3) Touch “Set starting point B” at the repeat end position.

■Supported formats

The types of files that can be played are as follows.
(Not all files are guaranteed to be played back.)

Image files

Extension	Max. resolution
*.bmp	15360×8640
.jpg (.jpeg)	1920×1080*
*.png	1920x1080

* Progressive JPEG: 1024x768

Music files

Extension	Audio coding	Sample rate	Bit rate
*.aac	AAC-LC	8k - 48kHz	16k - 576kbps
*.mp3	MPEG1/2 layer3		8k - 320kbps
*.ogg	Vorbis	6k - 48kHz	8k - 500kbps

Video files

Extension	Video coding	Audio coding	Max. resolution	Maximum bit rate
.3gp (.3GP2)	mpeg1/2 (MP @HL)	Mpeg1/2 Layer1/2/3, AAC-LC, vorbis, LPCM, AMR-NB	1920x1080@60fps	80Mbps
	Mpeg-4 (Simple Profile, Advanced Simple Profile@ Level 5) *1			
	H.263			
	H.264 (Main, High, High10@Level 6.0)		4096x2304@60fps	200Mbps
.asf (.asx)	H.264 (Main, High, High10@Level 6.0)	Mpeg1/2 Layer1/2/3, AAC-LC, vorbis, LPCM, AMR-NB	4096x2304@60fps	200Mbps
*.avi	mpeg1/2 (MP @HL)	Mpeg1/2 Layer1/2/3, AAC-LC, vorbis, LPCM, AMR-NB	1920x1080@60fps	80Mbps
	Mpeg-4 (Simple Profile, Advanced Simple Profile@ Level 5)			
	H.263			
	H.264 (Main, High, High10@Level 6.0)		4096x2304@60fps	200Mbps
*.dat	mpeg1/2 (MP @HL)	Mpeg1/2 Layer1/2/3, AAC-LC, LPCM	1920x1080@60fps	80Mbps
*.flv	H.263	Mpeg1/2 Layer1/2/3, AAC-LC, LPCM	1920x1080@60fps	80Mbps
	H.264 (Main, High, High10@Level 6.0)		4096x2304@60fps	200Mbps
*.mkv	mpeg1/2 (MP @HL)	Mpeg1/2 Layer1/2/3, AAC-LC, LPCM, opus	1920x1080@60fps	80Mbps
	Mpeg-4 (Simple Profile, Advanced Simple Profile@ Level 5) *1			
	H.264 (BP, MP, HP @Level 5.1)		4096x2304@60fps	160Mbps
	H.265 (Main/Main10 Profile, High Tier @Level 6.1)		4096x2304@60fps 8192x4320@30fps	200Mbps
	vp8		1920x1080@60fps	60Mbps
	vp9 (Profile 0 (420 8bit), Profile 2 (420 10bit))		4096x2304@60fps 8192x4320@30fps	60Mbps
*.mov	mpeg1/2 (MP @HL)	Mpeg1/2 Layer1/2/3, AAC-LC, vorbis, LPCM, AMR-NB	1920x1080@60fps	80Mbps
	Mpeg-4 (Simple Profile, Advanced Simple Profile@ Level 5) *1			
	H.263			
	H.264 (Main, High, High10@Level 6.0)		4096x2304@60fps	200Mbps
	H.265 (Main/Main10 Profile, High Tier @Level 6.1)		4096x2304@60fps 8192x4320@30fps	200Mbps
*.mp4	mpeg1/2 (MP @HL)	Mpeg1/2 Layer1/2/3, AAC-LC, vorbis, LPCM, AMR-NB	1920x1080@60fps	80Mbps
	Mpeg-4 (Simple Profile, Advanced Simple Profile@ Level 5)			
	H.263			
	H.264 (Main, High, High10@Level 6.0)		4096x2304@60fps	200Mbps
	H.265 (Main/Main10 Profile, High Tier @Level 6.1)		4096x2304@60fps 8192x4320@30fps	200Mbps
	vp8		1920x1080@60fps	60Mbps
*.VOB	mpeg1/2 (MP @HL)	Mpeg1/2 Layer1/2/3, AAC-LC, LPCM	1920x1080@60fps	80Mbps
.mpg (.mpeg)	mpeg1/2 (MP @HL)	Mpeg1/2 Layer1/2/3, AAC-LC, LPCM	1920x1080@60fps	80Mbps
*.webm	vp8	Mpeg1/2 Layer1/2/3, AAC-LC, LPCM, opus	1920x1080@60fps	60Mbps
	vp9 (Profile 0 (420 8bit), Profile 2 (420 10bit))		4096x2304@60fps 8192x4320@30fps	60Mbps
*.ts	mpeg1/2 (MP @HL)	Mpeg1/2 Layer1/2/3, AAC-LC, LPCM	1920x1080@60fps	80Mbps
	H.264 (Main, High, High10@Level 6.0)		4096x2304@60fps	200Mbps
	H.265 (Main/Main10 Profile, High Tier @Level 6.1)		4096x2304@60fps 8192x4320@30fps	200Mbps

*1 GMC is not supported.

PDF Viewer

Starts when a PDF file is opened on an application such as “File Manager”, etc.

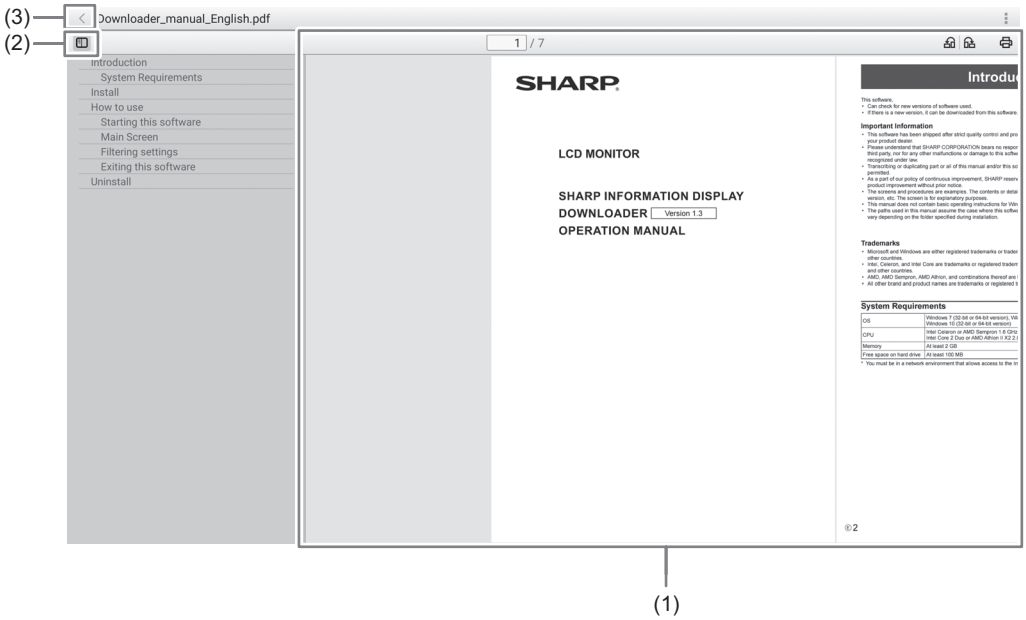

(1) Displays the PDF.
Zoom-in or zoom-out the display by pinching.
Magnify the display by double-tap.

1 / 7 :	Displays the current page / total number of pages.
:	Rotate the page view 90°. All pages rotate.
:	Performs printing. (See page 43.)

(2) Close / display the bookmark.

(3) Exit the application.

Web Browser

View the website.

1. On the home screen of APPLICATION mode, touch “Web Browser”.

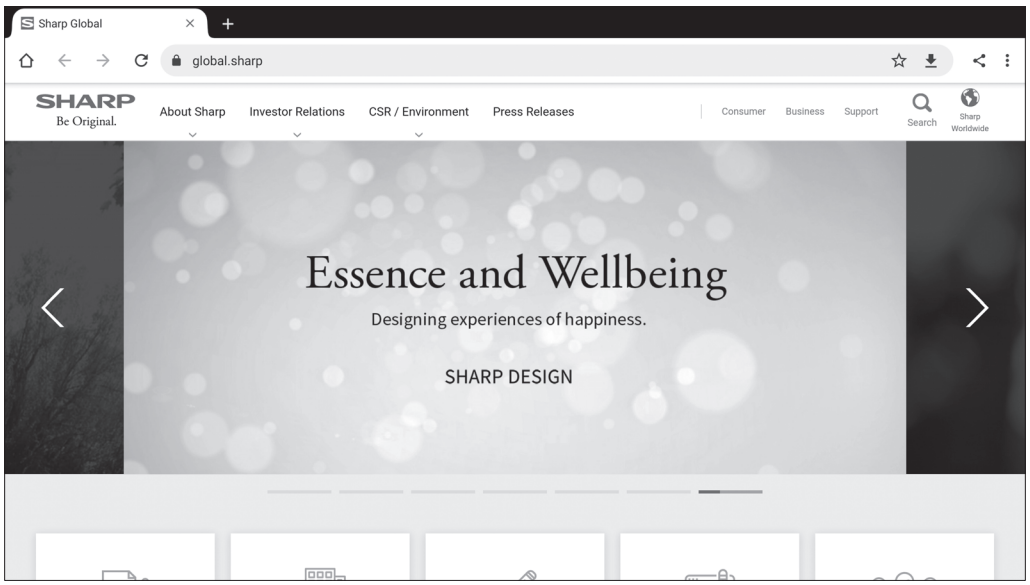

Exiting

Close the Web Browser from the recent app bar.

TIPS

- The manual for this application can be downloaded from our website. (Provided only in English.)
  https://www.sharp.eu/download-centre
- If a large-sized website is displayed, the Web Browser may close.
- If the application does not work properly, make sure that the date and time are set correctly.
- A password is required when changing the Web Browser setting. (Factory setting) (See page 45.)

Caution

- Take proper care when browsing websites.
  In a malicious website, the input contents may be stolen and fraudulent applications may be downloaded.
  If a fraudulent application is installed, it may result in a virus infection or stealing of communication details.
- Be sure to log out from a website that you have used by logging in.
  If you remain logged in, your personal information such as the ID may be known by a third person.

Printing

You can print with SHARP MFP that supports the Sharp Print Service Plugin on the same network on this monitor.

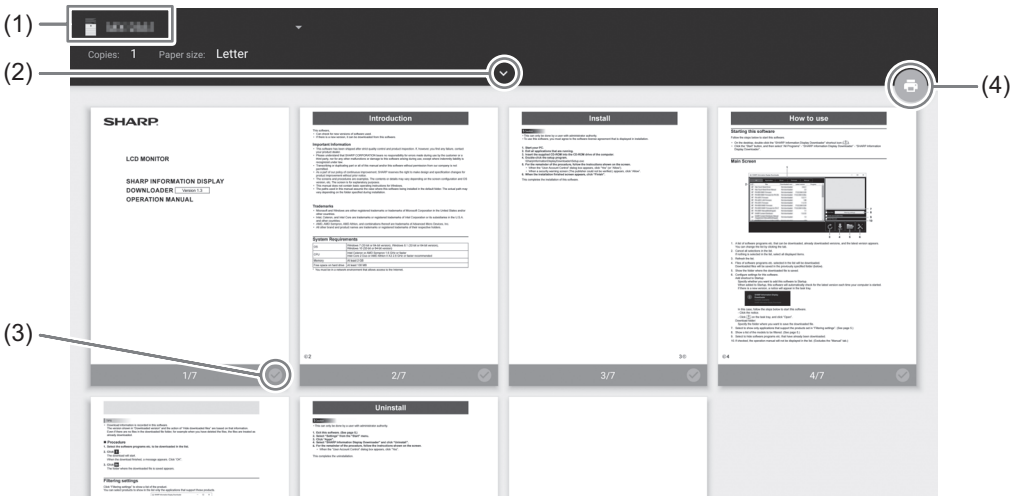

(1) Select an MFP with .
(2) Set the printing settings.
(3) Check the page to you want to print.
(4) Print.

Updating the Software (Update)

Update applications that are factory-installed in APPLICATION mode. (A network environment that allows access to the internet is required.)

On the home screen of APPLICATION mode, touch “All Apps”, and then touch “Updater”.
When you use Updater, a password is required. (Factory setting) (See page 45.)
The “Export Law Assurances” appears. Select “OK”.
To use the software distributed by the Updater, you must agree to the “Export Law Assurances”.

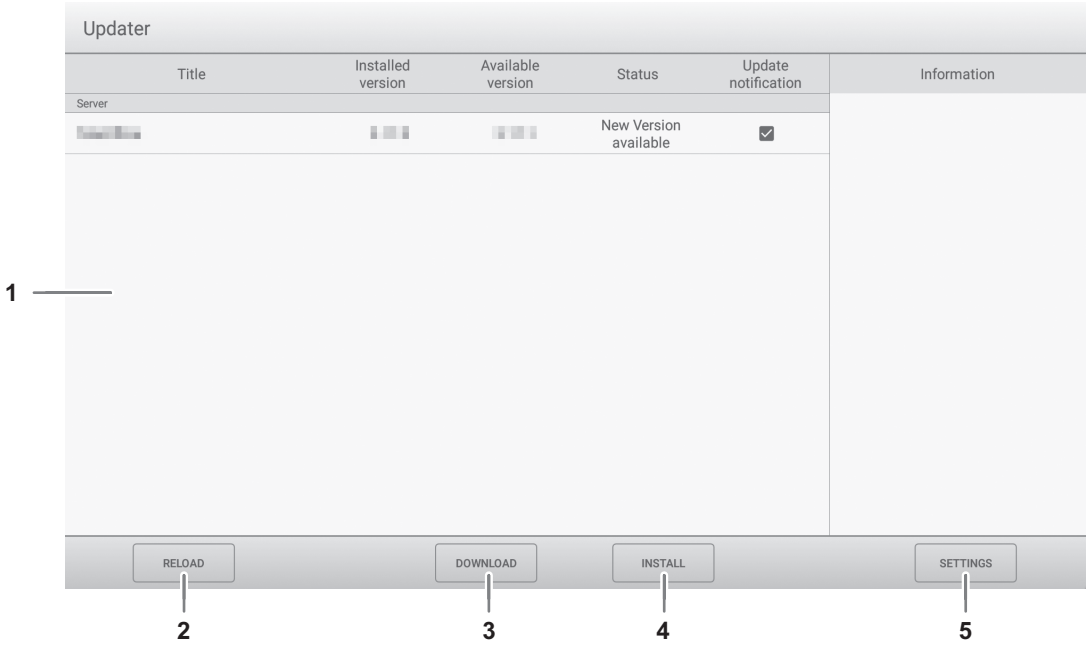

1. **Information area**
   Shows information on already downloaded software and software that can be downloaded.
   Update notification: Displayed when “Notify new versions” is set to on. Update of software that unchecked will not be notified.
2. **RELOAD**
   Refresh the information in the information area.
3. **DOWNLOAD**
   Download the selected software.
4. **INSTALL**
   Install the selected software.
5. **SETTINGS**
   Configure settings for Update.
   - Hide updated items.....Set whether or not to hide updated softwares in the information area.
   - Notify new versions.....Set whether or not to display a message if updated software exists.
   - Scheduled installation.....Set whether or not to update the software automatically.
   - Scheduled installation day.....When “Scheduled installation” is set to on, set the day of week to update the software automatically.
   - Scheduled installation time.....When “Scheduled installation” is set to on, set the time to update the software automatically.
   - About Updater.....Display the information of this application.
   - Reset .....Initialize the “SETTINGS”.

Menu Items

Displaying the menu screen

Adjusts the images and sound. Makes settings for this monitor.

Caution

- Do not turn the main power switch off while the menu items are being displayed. Doing so may initialize the settings.

Touch to operate.

1. **On the home screen of APPLICATION mode, touch “System Settings”.**
   If you want to adjust input video, touch on the sidebar and touch “System Settings”.

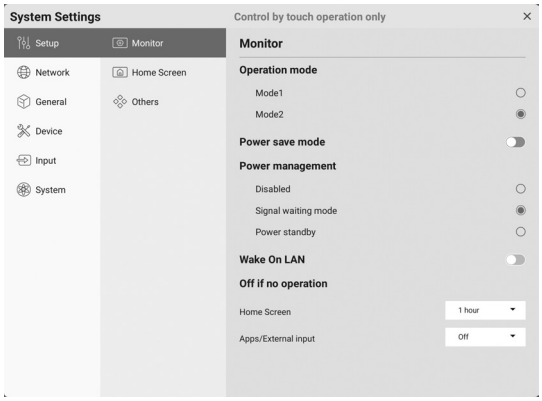

2. **Set each item. (See page 46.)**
3. **Once the settings are complete, touch “X”.**

■Password

- A password is required in the following cases. A screen for the input of the password appears. (Factory setting)
  - When setting the Network menu or System menu.
  - When setting the Function menu.
  - When changing the Web Browser setting.
  - When using Updater.
- When using these for the first time, a screen for the set of the password appears. Set a password.

Menu item details

■ Setup

Monitor

Operation mode

"Mode1" is the recommended setting and conforms to the "Normal Configuration" as defined in the EcoDesign Regulation (2019/2021).

Mode1.....“Power management” is set to “Power standby” and “Power save mode” is set to on.
These settings can not be changed.
“Wake On LAN” is set to off.

Mode2.....“Power management” is set to “Signal waiting mode” and “Power save mode” is set to off.
These settings can be changed.

Power save mode

When set to off, startup time from standby state is reduced. Note, however, that more power will be consumed in standby state. APPLICATION mode continues to run in standby state.
When set to on, current consumption is reduced while the monitor is in standby state. APPLICATION mode is also shut down. Note, however, that the startup time from standby state becomes longer.
If set to on, configure whether the “Wake On LAN” should be enabled. (See below.)

Power management

Sets whether or not to move to input signal waiting state or standby state in the no signal state.

Disabled.....Do not move.
Signal waiting mode....Move to input signal waiting state.
Power standby.....If the no signal state continues for approximately 5 minutes, the monitor moves to the standby state.
The application data that is not saved is lost.

Wake On LAN

This configures whether or not to enable the “Wake On LAN” when the “Power save mode” is set to on.
When set to on, standby state is networked standby mode.
When set to off, standby state is standby mode.

Off if no operation

Determines whether or not to set the monitor to go into standby state when there is no operation. If a switch is to be made, it also configures the time until the switch is made.

Home screen .....Sets the operation while the home screen of APPLICATION mode is displayed.
Apps/External input.....Sets the operation while a screen other than the home screen of APPLICATION mode is displayed (i.e., application screen, external input).

Home screen

App icon layout on home screen

Sets the icons of the applications to be arranged on the home screen of APPLICATION mode.

Synappx settings

Synappx setting.....Sets whether or not to display the “Synappx” icon on the home screen of APPLICATION mode.
Input for Synappx.....When “Synappx setting” is set to on, sets the input terminal to which the computer on which Synappx is installed is connected.

Others

Sidebar

Sets whether or not to display the sidebar.

Logo screen

Sets whether or not to display the logo screen when turning the power on.

Startup animation

Sets whether or not to display the animation when turning the power on.

Color Universal Design

The following applications are designed with Color Universal Design to enable better visibility for most people, regardless of differences of color vision between individuals.
When set to on, the screen is displayed conforming to Color Universal Design.

- Overlay board
- Whiteboard

■ Network

Wireless LAN

Sets whether or not to use a wireless LAN when attaching a wireless adapter. To use a wireless LAN, set the access points.
You cannot use the “Access point” when using a “Wireless LAN”.
Cannot be used simultaneously with Ethernet. Ethernet is preferred if there is a connection on Ethernet.

Ethernet

Sets whether or not to use a LAN terminal.
To use a LAN terminal, set the IP address, etc.

Access point

Sets whether or not to use this monitor as an access point when attaching a wireless adapter.
To change the settings, touch “Change”. You can change “Access point name”, “Encryption mode” and “Password”.
After completing the settings, touch “Save”.
You cannot use the “Wireless LAN” when using a “Access point”.

Communication settings

Monitor control via network

Sets whether or not to control this monitor via network.

Advanced:

User name ..... Sets an account name when connecting to this monitor.
Password ..... Sets a password when connecting to this monitor.
Port ..... Sets the port number to be used.
Auto logout time (minutes)..... Sets the time to logout automatically by minutes when there is no communication.

Reset..... Initialize the “Monitor control via network” settings.

Command Format

Select the command format.

For details of each command, see the manual on the following website.

https://www.sharp.eu/download-centre

■ General

Custom

Wallpaper

Sets the background of the home screen of APPLICATION mode.

Audio

Volume

Adjusts the volume.

Max volume

Sets the maximum volume that cannot be exceeded.

Balance

Adjusts the balance of the audio sound between right and left.

Sound mode

Selects the sound mode.

Bass..... Adjusts the volume of bass-level sound. You can set this when the “Sound mode” is set to “Custom”.
Treble..... Adjusts the volume of treble-level sound. You can set this when the “Sound mode” is set to “Custom”.

Mute with freeze

Set whether or not audio turns off during freeze.

Audio output

Sets the volume of sound output from the audio output terminal.
The volume from the digital audio output (optical) terminal is fixed regardless of the setting.

Variable1..... You can adjust the volume from the speakers of this monitor and the audio output terminal simultaneously by using “Volume”.
Variable2..... You can adjust the volume from the audio output terminal by using “Volume”. Sound will not be output from the speakers of this monitor.
Fixed..... Fixes the volume from the audio output terminal. Adjust the volume by using an external device.

Picture

Brightness

Adjusts the brightness.

Color mode (HDMI/D-SUB/USB-C/DisplayPort/Video/OPS)

Selects color mode for the screen.

Black level (HDMI/D-SUB/USB-C/DisplayPort/Video/OPS)

Adjusts the entire brightness of the video signals. You can set this when the “Color mode” is set to “Custom”.

Contrast (HDMI/D-SUB/USB-C/DisplayPort/Video/OPS)

Adjusts the difference between the bright and dark portions of the image. You can set this when the “Color mode” is set to “Custom”.

Hue (HDMI/D-SUB/USB-C/DisplayPort/Video/OPS)

Adjusts the hue. You can set this when the “Color mode” is set to “Custom”.

Sharpness (HDMI/D-SUB/USB-C/DisplayPort/Video/OPS)

Adjusts the sharpness of the image. You can set this when the “Color mode” is set to “Custom”.

RGB input range (HDMI/OPS)

Sets the RGB input signal range.
When using HDMI or OPS set to “Auto”, the RGB input signal range is detected automatically. Use “Auto” normally.
If the RGB input signal range cannot be set appropriately even when using “Auto”, set according to the image. When the setting is different, images will be displayed with washed out blacks and compressed gradients.

White balance

Selects the white balance.

Compass

Set whether or not to use Compass.

Auto hide

Configures the time until the shortcut closes. When “Always-On” is selected, shortcut is displayed until the close operation is performed.

Actions

Set whether or not to display the compass ( ) when the shortcut is closed.

Compass style

Select the Compass display method.

Circle..... Displays the shortcuts in a circular array.
List ..... Displays the shortcuts in a horizontal line.

Custom compass

Changes the applications displayed in Compass.

Screen record

Configure the settings for “Screen record”. (See page 22.)

Resolution

Select the resolution of the video file to be recorded.

Volume source

Select the audio to record.

Time limit

Set the maximum recording time.

■ Device

Bluetooth

Set whether or not to use a commercially available Bluetooth device when attaching a wireless adapter.

File received

Display the list of received files in “File Manager”.

Bluetooth name

Changes the name of this monitor as a Bluetooth device.

Paired device

Displays a list of paired devices.

Available device

Displays a list of available devices. Select the device to connect.

Printer

Displays a list of connected printers. Select a printer to use.

Microphone

Displays a list of connected microphones. Select a microphone to use.

Camera

Displays a list of connected cameras. Select a camera to use.

■ Input

Input settings

Size (HDMI/D-SUB/USB-C/DisplayPort/Video/OPS)

Changes the screen size. (See page 28.)

PC mode (HDMI)

Configures the contents to be displayed on the HDMI input terminal.

Auto ..... Switches automatically.
PC..... Displays as a computer.
Video..... Displays as an AV device.

CEC settings (HDMI)

Makes settings for linkage with devices connected to HDMI input terminal through HDMI CEC.

HDMI CEC link

When this setting is set to on, the link will be used.
When this setting is set to off, the link will not be used.

Auto power on..... When “HDMI CEC link” is set to on, sets whether or not to turn this monitor ON by linking to the operation of the devices.

HDMI modes (HDMI)

“HDMI modes” settings determines how the video signal is processed and decoded at the HDMI input.

Mode1..... Normally used.
This will support most common color spaces and other encoding signals.
Mode2..... Used when proper display cannot be performed in “Mode1”, such as when a device that is not compatible with 4K is connected.

VGA image (D-SUB)

The “Clock”, “Phase”, “H Position”, and “V Position” are automatically adjusted.
Executed when “Auto” is touched. Use this automatic adjustment when you use the “D-SUB” to display a computer screen for the first time or when you change the setting of the computer. (See page 52.)

H position (D-SUB)

Adjust the horizontal position of the image.

V position (D-SUB)

Adjust the vertical position of the image.

Clock (D-SUB)

Adjusts frequency for sampling clock for applicable video. Adjust when there is flickering in the form of vertical stripes.
When using the adjustment pattern (see page 52), make adjustments so that no vertical stripe noise appears in it.

Phase (D-SUB)

Adjusts sampling clock phase for applicable video. Useful when small characters appear with low contrast and/or there are flickers at corners. When using the adjustment pattern (see page 52), make adjustments so that no horizontal stripe noise appears in it.
* Adjustments to “Phase” should be made only after “Clock” has been correctly set.

Others

No signal auto input select

Configures whether or not to automatically switch to a different input mode when signals become absent in the current input mode.
The “Last input mode” is the previous input mode.

Connect auto input select

Sets whether or not the input into the input terminal automatically changes when a video signal is input into that terminal.
The input via the expansion slot is ignored. (With some input signals, the input may not change.)

Start input mode

You can set the input mode that will be in effect when the power is turned on.
When this is set to “Last input mode”, the input mode when the power was last turned off will appear.

Startup app

When “Start input mode” is set to “APPLICATION”, sets the applications to be started automatically.

Input mode name

You can change the input mode name for each input terminal.

■ System

Date & Time

Automatic date & time

Sets whether or not to set the data & time automatically via network.

Date & Time

Sets the date and time when “Automatic date & time” is set to off.

Date format

Sets the display format for the date.

Use 24-hour format

Sets whether or not to display the time in the 24-hour format.

Time zone

Sets the time zone.

Language & keyboard

Virtual keyboard

Selects the keyboard to display on the screen.

Language

Sets the display language for the screen.

Schedule

Add schedule (See page 52)

Power can be turned ON at the specified time.
Power can be turned OFF at the specified time.
This monitor can be restarted at the specified time.

System update

Confirms the firmware version and updates the firmware.
If you connect the USB flash drive containing the firmware to this monitor and then touch “Check”, the firmware will be updated.

Security

Lock admin password

Sets whether or not a password is necessary in the following cases.

- When setting the Network menu or System menu.
- When setting the Function menu.
- When changing the Web Browser setting.
- When using Updater.

Screen lock

Set whether or not to lock the screen in the following cases.

- When the main power is turned off.
- When this monitor enters standby state, input signal waiting state or backlight off.
  Set the time until the screen is locked in the “Auto screen lock”.
- When locking the screen in Control Panel (see page 24).

If you lock the screen, set the unlock method.

Pattern lock.....Set the pattern to be entered when unlocking.
Password lock.....Set the password to be entered when unlocking.

Auto screen lock

Sets the time until the screen is locked.

Enable USB drive

Sets whether or not to allow the use of a USB flash drive.

About

Displays the information of this monitor.

■ Schedule

You can set the time to switch the monitor on and off.
Set this function with “Power status” in the System menu. (See page 51.)

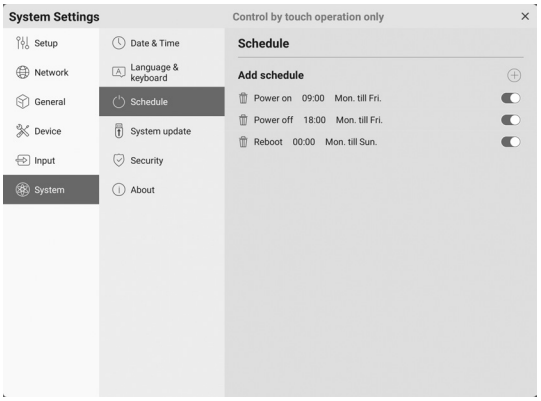

1. **Touch “+” for the “Add schedule”.**
2. **Select “Power on”, “Power off” or “Reboot”.**
3. **Set the time and day of implementation.**
   When “Reboot” is selected, set the time of implementation. Restart will occur daily.
4. **Touch “Save”.**
   The schedule is displayed as a list.
5. **Turn on the schedule.**
   You can also turn off the schedule.

!Caution

- Do not switch off the main power after setting the schedule.
- Specify the correct date and time. (See page 51.)
  Schedule does not function unless the date and time are specified.
- Check regularly that the set date and time are correct.
- In the power off schedule, a message is displayed on the screen when it is time to turn off. If you select “Cancel”, you can stop the power from turning off.
- Each schedule must be set at an interval of 6 minutes or more.

TIPS

- Up to 15 “Schedule” items can be registered.

Adjustments for computer screen display

■Automatic adjustment

When you use the “D-SUB” to display a computer screen for the first time, or when you change the setting of the computer, use the automatic screen adjustment.

1. **Switch the input to “D-SUB” and display the adjustment pattern.** (See the description below.)
2. **Touch on the sidebar and touch “System Settings”.**
3. **Touch “Auto” on the Input menu.**

TIPS

- If the screen cannot be adjusted properly with one automatic adjustment, repeat the automatic adjustment two or three times. Try manual adjustment if necessary.

■Screen display for adjustment

Before making adjustments, display an image to brighten the entire screen. If you are using a Windows computer, use the adjustment pattern. Download the adjustment pattern by using Information Display Downloader.

Opening the adjustment pattern

1. **Double-click [Adj_uty.exe] downloaded.**
   The adjustment pattern will appear.
   Adjust the screen automatically or manually.

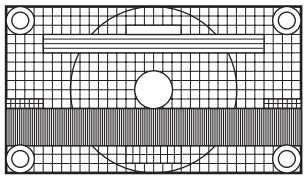

2. **When adjustment is finished, press the [Esc] on the computer’s keyboard to quit the adjustment program.**

TIPS

- If the display mode on the computer you are using is 65000 colors, the color levels in the color pattern may appear differently or grayscale may appear to be colored. (This is due to the specifications of the input signal and is not a malfunction.)

Reset/Functional Restriction Setting (Function menu)

You can reset the settings to the factory default settings or restrict operations. When you use Function menu, a password is required. (Factory setting) (See page 45.)

Perform the operation from the remote control unit.

1. **Press the FUNCTION button, and then press the MENU button within 10 seconds.**
   The Function menu appears.

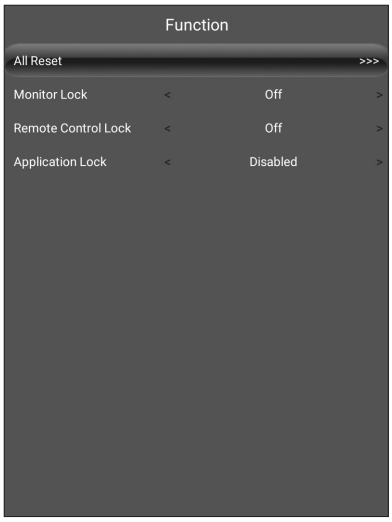

All reset

Resets the settings to the factory default settings.
In APPLICATION mode, only the settings of the factory-installed applications are initialized.
If you select “All reset”, a confirmation message is displayed. Select “All Reset”.
This monitor restarts when initialization ends.

Monitor lock

You can disable operations on the monitor that use buttons.

Off:
Enables operation.

All buttons:
Locks monitor buttons operation.

Touch:
Locks touch operation.

All buttons & touch:
Locks monitor buttons and touch operation.

Remote control lock

You can disable operations on the remote control unit that use buttons.

Off:
Enables operation.

All buttons:
Locks all button operations.

Except power & volume:
Locks operations other than power operation and VOLUME +/-.

Application lock

Sets whether or not to lock the use of the following application.

- Updater
- Computer control
- EShareServer
- Web Browser

Closing the Function menu

- Press the RETURN button on the remote control unit.

Troubleshooting

If you are experiencing any problem with your display, before calling for service, please review the following troubleshooting tips.

There is no picture or sound.
- The power LED is off.
  - Is power supplied to this monitor?
  - Is the power cord disconnected? (See page 14.)
  - Is the main power switch off? (See page 17.)
- The power LED lights or flashes (2 seconds interval) orange.
  - This monitor is in standby state. Turn on the power. (See page 17.)
- The power LED flashes orange (1 second interval).
  - There is no input signal.
  - Is an input mode selected that is appropriate for the input terminal to which the cable is connected? (See page 23.)
  - If any external equipment is connected, make sure the equipment is operating (playing back).

Remote control does not work.
- Are the batteries inserted with polarity (+,-) aligned? (See page 15.)
- Are the batteries exhausted?
- Point the remote control unit toward the monitor's remote control sensor. (See page 15.)
- Is operation disabled? (See page 53.)

The remote control unit's buttons for operating the HDMI-connected device do not work.
- When the input mode is APPLICATION, these buttons operate the application in APPLICATION mode.
- Is "HDMI CEC link" set to on of "CEC settings" on the Input menu?
- Switch to a different input mode, and then try switching the input mode back to "HDMI".

Sound from left and right speakers is reversed.
Sound is heard from only one side.
- Are audio cables connected properly?
- Check the setting of "Balance" of "Audio" on the General menu. (See page 48.)

There is a picture but no sound.
- Is the sound muted?
- Make sure the volume is not set to minimum.
- Are audio cables connected properly?
- Is the setting of "Audio output" of "Audio" on the General menu correct?

Unstable video.
- The signal may be incompatible.
- Try the automatic screen adjustment when "D-SUB" is in use.

The video from the HDMI input terminal does not appear properly.
- Does the HDMI cable support 4K, and is it HDMI standard compliant? The monitor will not work with cables that are not standard compliant.
- Is the input signal compatible with this monitor? (See pages 58 and 59.)
- If the connected device does not support 4K, set "HDMI modes" to "Mode2".

The video from the DisplayPort does not appear properly.
- Does the DisplayPort cable support 4K, and is it DisplayPort standard compliant? The monitor will not work with cables that are not standard compliant.
- Is the input signal compatible with this monitor? (See pages 58 and 59.)

The video from D-Sub input terminal does not appear correctly.
- Is the input signal compatible with this monitor? (See page 58.)

The video from the USB Type-C does not appear properly.
- Is the input signal compatible with this monitor? (See pages 58 and 59.)

Control buttons do not work.
There is no picture.
- Load noises from outside may be interfering with normal operation. Turn off the main power and turn it on after waiting at least 5 seconds, and then check the operation.

The input mode changes automatically.
- When "Connect auto input select" is set to on, the input mode automatically changes to that terminal when a video signal is input into the input terminal.
  For this reason, the input mode may change when the computer wakes up from system standby.

The touch panel does not respond.
- Is the USB cable connected properly?
- Have you disabled touch control? (See pages 24 and 53.)

The response of the touch panel is slow.
Some parts of the screen do not respond.
A different place is touched.

- Is the screen exposed to direct sunlight or other strong light? The touch panel uses infrared rays and thus may not operate correctly.
- Is there an obstacle between the infrared transmitter/receiver and the touch pen or your finger? An obstacle will prevent correct operation. If your fingers or a sleeve are too close to the screen, correct operation will not be possible.
- Is the infrared transmitter/receiver dirty? Gently wipe off any dirt with a soft cloth.
- If the touch panel is touched with a small tip less than about 1/8 inch (3 mm) x 1/8 inch (3 mm), the touch may not be detected by infrared and correct operation will not take place.
- Do not touch the touch panel when turning on the monitor. If you touch the touch panel, this may be detected as an element failure in the infrared transmitter/receiver and incorrect operation will result.
- Set the screen size to “Wide”. (See page 28.)

The screen is dark.

- When the internal temperature of the monitor rises excessively, the brightness of the backlight automatically decreases in order to prevent a further temperature rise.
- Remove the cause of the excessive temperature rise.

The monitor makes a cracking sound.

- You may occasionally hear a cracking sound from the monitor. This happens when the cabinet slightly expands and contracts according to change in temperature. This does not affect the monitor’s performance.

Power LED is flashing in orange and blue alternately.

- When the internal temperature of the monitor rises excessively, the brightness of the backlight decreases automatically in order to prevent high-temperature-related problems. When this occurs, the Power LED flashes orange and blue alternately.
- If the internal temperature rises further, the monitor automatically enters standby state. (The Power LED flashes orange and blue alternately.)
- Remove the cause of the excessive temperature rise.
  - If the monitor enters standby state due to a rise in temperature, to return to normal display, turn the power switch off and then back on again. The monitor, however, will enter standby state again if the cause of the temperature rise is not eliminated.
  - Check whether the monitor is placed at a location where a quick rise in temperature is likely. Internal temperature rises quickly if the vents on the monitor are blocked.
  - Internal temperature rises quickly if dust accumulates inside the monitor or around the vents. Remove dust if possible. Ask SHARP dealer about removing internal dust.

No sound is heard from the speaker.
Mic cannot be used.
Web camera cannot be used.

- Check if another device is connected via the USB or Bluetooth.
- If more than one equivalent devices are connected, they will be used in the following order:
  Bluetooth > USB > Internal (speaker only)
- Remove unnecessary devices.
- The mic of the Bluetooth headset cannot be used. This monitor does not support HSP/HFP.
- Is another application using the device?
  The device may not work at the same time in multiple applications. In this case, close the application.
- Do not switch the input mode while using the device.
  The connection will change according to the input mode switching, so speaker, mic or camera may not be recognized correctly and may not operate.
  In this case, turn this monitor or device power off and then on.

The Bluetooth device cannot be connected.
The connection with the Bluetooth device is lost.

- Connect the USB extension cable (commercially available) to the USB port for APPLICATION mode, and connect the wireless adapter (supplied) to the USB extension cable (commercially available). Place the wireless adapter (supplied) where it can be seen from the front of this monitor.

Specifications

■Product Specifications

Model		PN-LC862	PN-LC752	PN-LC652
LCD component		86" Class [85-9/16 inch (217.4 cm) diagonal] TFT LCD	75" Class [74-1/2 inch (189.3 cm) diagonal] TFT LCD	65" Class [64-1/2 inch (163.9 cm) diagonal] TFT LCD
Max. resolution (pixels)		3840 x 2160		
Max. colors		Approx. 1.07 billion colors		
Pixel pitch		0.494 mm (H) × 0.494 mm (V)	0.430 mm (H) × 0.430 mm (V)	0.372 mm (H) × 0.372 mm (V)
Brightness (typical)		450 cd/m^2 *1		
Contrast ratio (typical)		1200: 1		
Viewing angle		178° right/left/up/down (contrast ratio ≥ 10)		
Screen active area inch (mm)		74-5/8 (W) x 41-15/16 (H) (1895.0 x 1066.0)	64-15/16 (W) x 36-9/16 (H) (1649.7 x 927.9)	56-1/4 (W) x 31-5/8 (H) (1428.5 x 803.5)
Computer input signal		Analog RGB (0.7 Vp-p) [75 Ω]		
Sync signal		Horizontal/vertical separate (TTL: positive/negative)		
Plug and play		VESA DDC2B		
Input terminals	Video	Mini D-sub 15 pin, 3 rows x 1 Mini AV in x 1 HDMI x 3 DisplayPort x 1 USB Type-C x 1		
	Serial (RS-232C)	D-sub 9 pin x 1		
	Audio	3.5 mm mini stereo jack x 1		
Output terminals	Video	HDMI x 1		
	Audio	3.5 mm mini stereo jack x 1 Digital audio output (optical) x 1		
USB port		USB 3.0 compliant x 4		
LAN terminal		10 BASE-T/100 BASE-TX/1000 BASE-T		
System	CPU	Arm Cortex-A55 processor (Quad-Core)		
	Memory	4GB		
	Storage	16GB		
Wireless LAN		IEEE802.11ac/n/a/g/b compliant Encryption mode: Enhanced Open, WEP, WPA, WPA2		
Bluetooth		4.2 compliant Supported protocols: A2DP, AVRCP, GATT, HID		
Expansion slot		19V, 4.74A (power supplied when expanding the functions with an optional part)		
Speaker output		15 W + 15 W		
Touch Panel	Detection method	Infrared blocking detection method		
	Computer connector	USB (3.0 compliant) (Type B) x 2		
Power requirement		AC 100 - 240 V, 5.6 A, 50/60 Hz	AC 100 - 240 V, 4.7 A, 50/60 Hz	AC 100 - 240 V, 4.4 A, 50/60 Hz
Operating temperature *2 *3		41°F to 95°F (5°C to 35°C)		
Operating humidity *3		20% to 80% (no condensation)		
Power consumption*4 (Max / networked standby mode *5 / standby mode *5 / off mode)		260 W (500 W/2 W/0.5 W/0 W)	200 W (420 W/2 W/0.5 W/0 W)	180 W (390 W/2 W/0.5 W/0 W)
Dimensions inch (mm) (excluding protrusions)		Approx. 77-1/2 (W) x 3-7/16 (D) x 46-1/16 (H) (1967.9 x 87.1 x 1170.2)	Approx. 67-13/16 (W) x 3-7/16 (D) x 40-5/8 (H) (1722.5 × 87.1 × 1032.1)	Approx. 59-1/2 (W) x 3-3/8 (D) x 36-1/8 (H) (1511.6 × 85.9 × 917.9)
Weight lbs. (kg)		Approx. 143.3 (65)	Approx. 112.4 (51)	Approx. 84.9 (38.5)

*1 Brightness will depend on input mode and other picture settings. Brightness level will decrease over time. Due to the nature of the equipment, it is not possible to precisely maintain a constant level of brightness. This is the brightness of the LCD panel, not the brightness of the product.
*2 Temperature condition may change when using the monitor together with the optional equipments recommended by SHARP. In such cases, please check the temperature condition specified by the optional equipments.
*3 In addition, check the requirements of the computer and other devices to be connected, and make sure that all requirements are satisfied.
*4 Factory setting. (When no optional part is attached.)
*5 When no optional part is attached.

As a part of our policy of continuous improvement, SHARP reserves the right to make design and specification changes for product improvement without prior notice. The performance specification figures indicated are nominal values of production units. There may be some deviations from these values in individual units.

■Dimensional Drawings

Note that the values shown are approximate values.

[PN-LC862]

Unit: inch [mm]

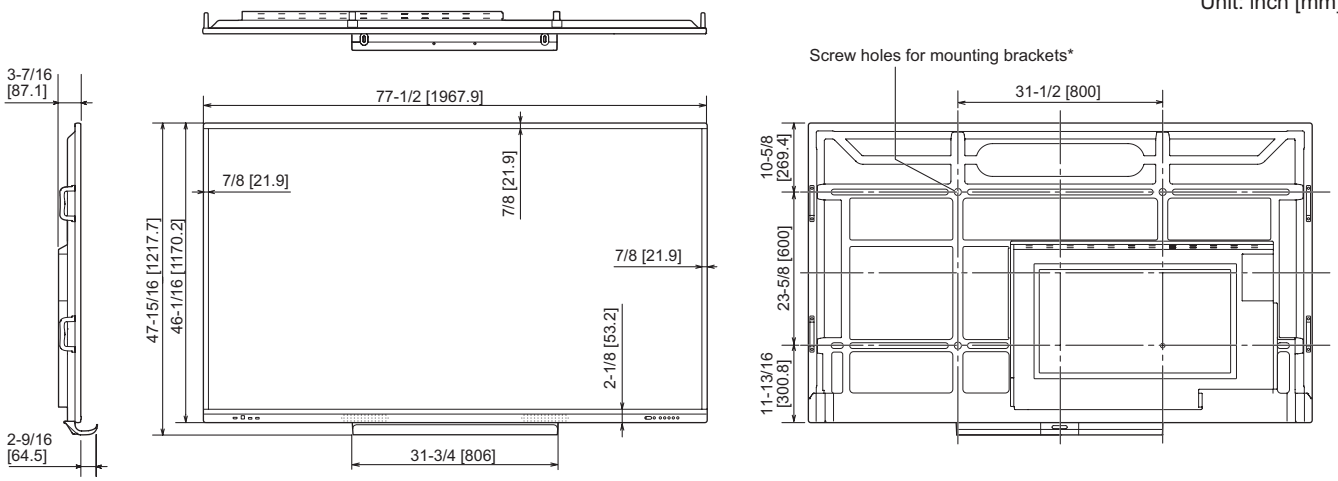

[PN-LC752]

Unit: inch [mm]

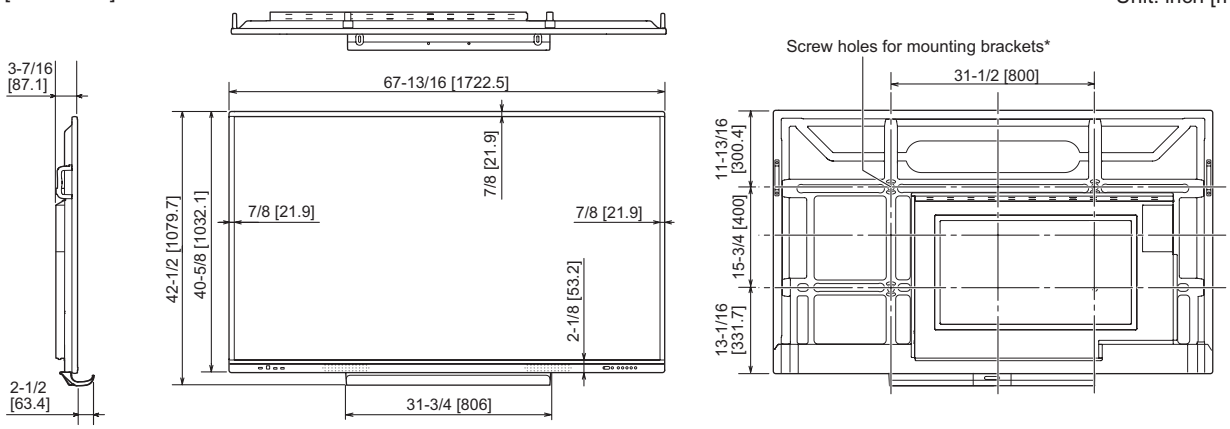

[PN-LC652]

Unit: inch [mm]

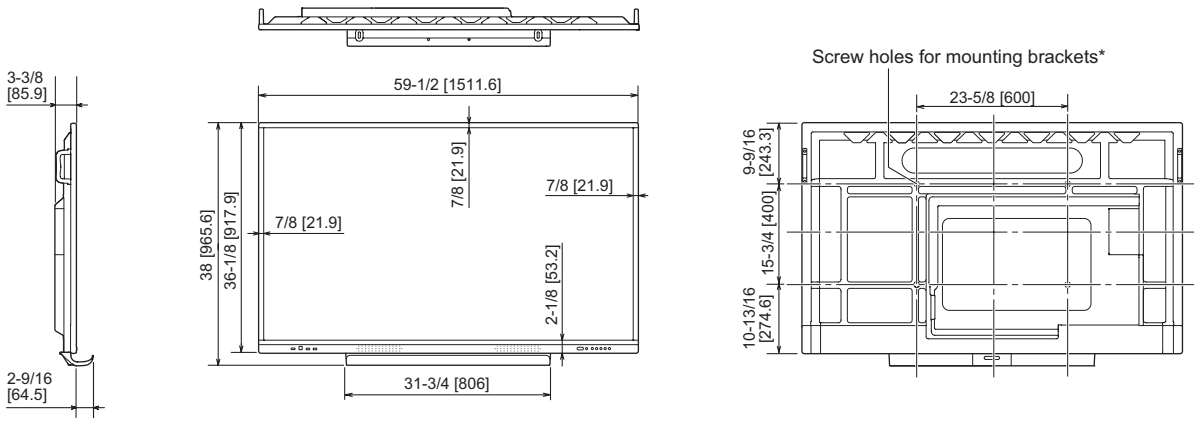

* When mounting the monitor, be sure to use a wall-mount bracket that complies with the VESA-compatible mounting method. SHARP recommends using M8 screws and tighten the screws.
Note that screw hole depth of the monitor is 9/16 inch (15 mm). Loose mounting may cause the product to fall, resulting in serious personal injuries as well as damage to the product. The screw and hole should come together with over 3/8 inch (10 mm) length of thread. Use a bracket which has been approved for UL1678 standard, and which can endure at least 4 times or more the weight of the monitor.

■Compatible signal timing (PC)

Screen resolution		Hsync	Vsync	Frequency	Digital			Analog
					HDMI	DisplayPort	USB-C	D-SUB
VESA	640 × 480	31.5kHz	60Hz	25.175MHz	Yes	Yes	Yes	Yes
	800 × 600	37.9kHz	60Hz	40MHz	Yes	Yes	Yes	Yes
	1024 × 768	48.4kHz	60Hz	65MHz	Yes	Yes	Yes	Yes
	1280 × 960	60kHz	60Hz	108MHz	Yes	Yes	Yes	Yes
	1280 × 1024	64kHz	60Hz	108MHz	Yes	Yes	Yes	Yes
	1360 × 768	47.7kHz	60Hz	85.5MHz	Yes	Yes	Yes	Yes
	1440 × 900	55.9kHz	60Hz	106.5MHz	Yes	Yes	Yes	Yes
	1680 × 1050	65.3kHz	60Hz	146.25MHz	Yes	Yes	Yes	Yes
Wide	1280 × 720	44.7kHz	60Hz	74.4MHz	Yes	Yes	Yes	Yes
	1920 × 1080	67.5kHz	60Hz	148.5MHz	Yes	Yes	Yes	Yes
	3840 × 2160	54kHz	24Hz	297MHz	Yes	Yes	Yes	-
		56.25kHz	25Hz	297MHz	Yes	Yes	Yes	-
		67.5kHz	30Hz	297MHz	Yes	Yes	Yes	-
		112.5kHz	50Hz	594MHz	Yes	Yes	Yes	-
		135kHz	60Hz	594MHz	Yes	Yes	Yes	-
	4096 × 2160	54kHz	24Hz	297MHz	Yes	Yes	Yes	-
		56kHz	25Hz	297MHz	Yes	Yes	Yes	-
		67kHz	30Hz	297MHz	Yes	Yes	Yes	-
		112.5kHz	50Hz	594MHz	Yes	Yes	Yes	-
		135kHz	60Hz	594MHz	Yes	Yes	Yes	-
US TEXT	720 × 400	31.5kHz	70Hz	28.3MHz	Yes	Yes	Yes	Yes

• Depending on the connected computer, images may not be displayed properly even if the compatible signal described above is input.

■Compatible signal timing (AV)

Screen resolution	Frequency	HDMI	USB-C
4096 × 2160p	24Hz	Yes	
	25Hz	Yes	
	30Hz	Yes	
	50Hz	Yes	
	59.94Hz	Yes	
	60Hz	Yes	
3840 × 2160p	24Hz	Yes	
	25Hz	Yes	
	30Hz	Yes	
	50Hz	Yes	
	59.94Hz	Yes	
	60Hz	Yes	
1920 × 1080p	24Hz	Yes	
	50Hz	Yes	
	59.94Hz	Yes	
	60Hz	Yes	
1920 × 1080i	50Hz	Yes	
	59.94Hz	Yes	
	60Hz	Yes	
1280 × 720p	50Hz	Yes	
	59.94Hz	Yes	
	60Hz	Yes	
720 × 576p	50Hz	Yes	
720 × 480p	59.94Hz	Yes	
	60Hz	Yes	
640 × 480p(VGA)	59.94Hz	Yes	
	60Hz	Yes	
720(1440) × 576i	50Hz	Yes	
720(1440) × 480i	59.94Hz	Yes	
	60Hz	Yes	

■DDC (plug and play)

The monitor supports the VESA DDC (Display Data Channel) standard.
DDC is a signal standard for plug and play between monitors and computers. Information about resolution and other parameters is exchanged between the two. This function can be used if the computer supports DDC and it has been configured to detect plug-and-play monitors.
There are several types of DDC, depending on the communication method used. This monitor supports DDC2B.

■Channels that can be used in wireless LAN (Europe)

Standard	Channel	Frequency band (center frequency)
IEEE802.11n/g/b	1-13ch	2412-2472MHz
IEEE802.11ac/n/a	36/40/44/48ch	5180-5240MHz
	52/56/60/64ch	5260-5320MHz
	100/104/108/112/116/120/124/128/132/136/140ch	5500-5700MHz

- Outdoor use of the 5 GHz band is restricted by the Radio Law.

■Channels that can be used in wireless LAN (Asia/Pacific)

Standard	Channel	Frequency band (center frequency)
IEEE802.11n/g/b	1-13ch	2412-2472MHz
IEEE802.11ac/n/a	36/40/44/48ch	5180-5240MHz
	52/56/60/64ch	5260-5320MHz

- Outdoor use of the 5 GHz band is restricted by the Radio Law.

Intellectual Property Rights and Other Matters

■Information on the software license for this product

Software composition

The software included in this product is comprised of various software components whose individual copyrights are held by SHARP or by third parties.

Software developed by SHARP and open source software

The copyrights for the software components and various relevant documents included with this product that were developed or written by SHARP are owned by SHARP and are protected by the Copyright Act, international treaties, and other relevant laws. This product also makes use of freely distributed software and software components whose copyrights are held by third parties. These include software components covered by a GNU General Public License (hereafter GPL), a GNU Lesser General Public License (hereafter LGPL) or other license agreement.

Obtaining source code

Some of the open source software licensors require the distributor to provide the source code with the executable software components. GPL and LGPL include similar requirements. For information on obtaining the source code for the open source software and for obtaining the GPL, LGPL, and other license agreement information, visit the following website:
https://jp.sharp/business/lcd-display/support/download/source_e.html
We are unable to answer any questions about the source code for the open source software. The source code for the software components whose copyrights are held by SHARP is not distributed.

About the MPEG-4 AVC, MPEG-4 Visual license included in this product

1. MPEG AVC
THIS PRODUCT IS LICENSED UNDER THE AVC PATENT PORTFOLIO LICENSE FOR THE PERSONAL USE OF A CONSUMER OR OTHER USES IN WHICH IT DOES NOT RECEIVE REMUNERATION TO (i) ENCODE VIDEO IN COMPLIANCE WITH THE AVC STANDARD (“AVC VIDEO”) AND/OR (ii) DECODE AVC VIDEO THAT WAS ENCODED BY A CONSUMER ENGAGED IN A PERSONAL ACTIVITY AND/OR WAS OBTAINED FROM A VIDEO PROVIDER LICENSED TO PROVIDE AVC VIDEO. NO LICENSE IS GRANTED OR SHALL BE IMPLIED FOR ANY OTHER USE. ADDITIONAL INFORMATION MAY BE OBTAINED FROM MPEG LA, L.L.C. SEE HTTP://WWW.MPEGLA.COM

2. MPEG-4 Visual
THIS PRODUCT IS LICENSED UNDER THE MPEG-4 VISUAL PATENT PORTFOLIO LICENSE FOR THE PERSONAL AND NON-COMMERCIAL USE OF A CONSUMER FOR (i) ENCODING VIDEO IN COMPLIANCE WITH THE MPEG-4 VISUAL STANDARD (“MPEG-4 VIDEO”) AND/OR (ii) DECODING MPEG-4 VIDEO THAT WAS ENCODED BY A CONSUMER ENGAGED IN A PERSONAL AND NONCOMMERCIAL ACTIVITY AND/OR WAS OBTAINED FROM A VIDEO PROVIDER LICENSED BY MPEG LA TO PROVIDE MPEG-4 VIDEO. NO LICENSE IS GRANTED OR SHALL BE IMPLIED FOR ANY OTHER USE. ADDITIONAL INFORMATION INCLUDING THAT RELATING TO PROMOTIONAL, INTERNAL AND COMMERCIAL USES AND LICENSING MAY BE OBTAINED FROM MPEG LA, LLC. SEE HTTP://WWW.MPEGLA.COM.

Mounting Precautions (For SHARP dealers and service engineers)

- When installing, removing or moving the monitor, ensure that this is carried out by at least 4 people. (PN-LC652: at least 2 people.)
- Be sure to use a wall-mount bracket designed or designated for mounting the monitor.
- This monitor is designed to be installed on a concrete wall or pillar. Reinforced work might be necessary for some materials such as plaster / thin plastic board / wood before starting installation.
- This monitor and bracket must be installed on a wall which can endure at least 4 times or more the weight of the monitor. Install by the most suitable method for the material and the structure.
- To attach a VESA-compliant mounting bracket, use M8 screws that are 3/8 inch (10 mm) to 9/16 inch (15 mm) longer than the thickness of the mounting bracket.

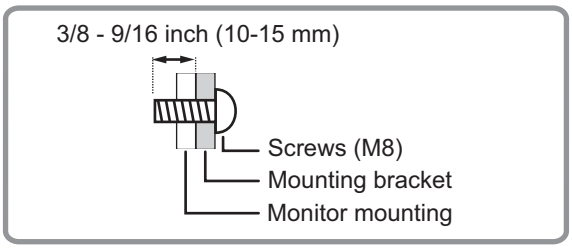

- Do not use an impact driver.
- When moving the monitor, be sure to hold the handles or the parts marked by ▭ below. Do not grasp the screen or tray. This may cause product damage, failure, or injury.

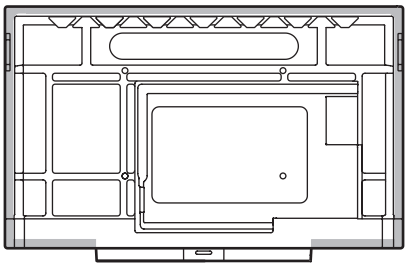

- If you need to temporarily place the monitor on a table or other surface during installation, spread a thick soft cloth on the table to prevent damage to the screen and table.
- Prior to repacking or removal, remove the tray.
- After mounting, please carefully ensure the monitor is secure, and not able to come loose from the wall or mount.
- Do not use any screw holes other than those for mounting brackets, located on the rear of the monitor, for installation.

■Attaching the Tray

Secure the tray using 4 tray mounting screws (M3x8) (supplied).

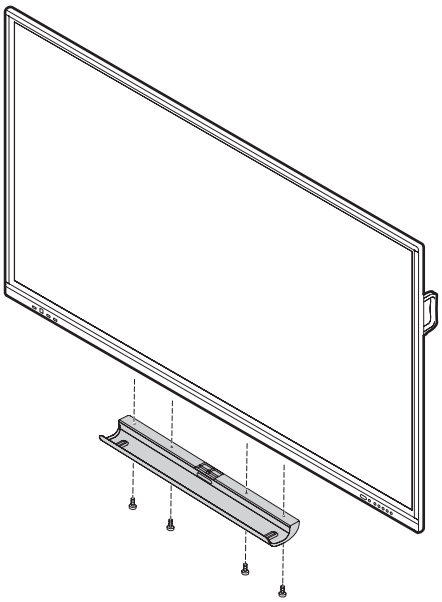

SHARP

PN-LC862-LC752-LC652 Me EN23D(1)