Questo manuale d'istruzione è fornito da trovaprezzi.it. Scopri tutte le offerte per Thronmax Stream GO X1 Pro o cerca il tuo prodotto tra le migliori offerte di Webcam

trovaprezzi.it

Questo manuale d'istruzione è fornito da trovaprezzi.it. Scopri tutte le offerte per Thronmax Stream GO X1 Pro o cerca il tuo prodotto tra le migliori offerte di Web Cam

THRONMAX

STREAM GO X1 PRO WEBCAM USER GUIDE

OVERVIEW

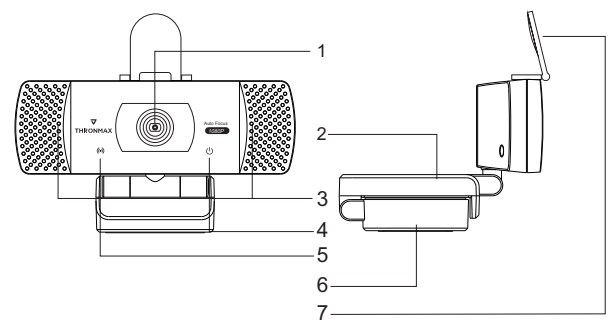

1.Lens	2.Mount bracket	3.Microphone
4.Power indicator	5.Signal indicator	6.Tripod screw
7.Privacy cover		

PLACE YOUR WEBCAM

1.Rotate the mount bracket and place the webcam on the monitor.
2.You can place the webcam on the desktop as drawing.
3.You also can mount the webcam to a tripod as you need.

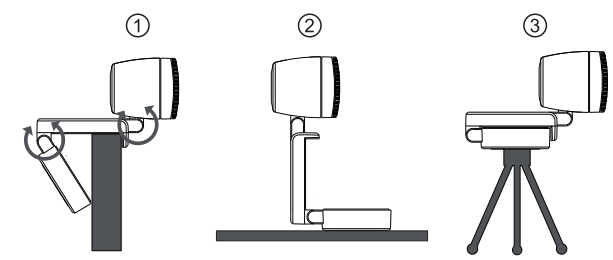

CONNECT YOUR WEBCAM

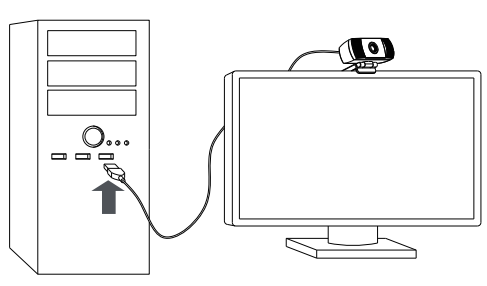

1.Plug the webcam into USB scoket of PC or TV STB.
2.Wait about one minute,webcam will install automatically.

GETTING START WITH VIDEO CALLING

To take advantage of video calling,both you and the person you call must install video calling application. such as Skype, Zoom.
As well as a USB camera and video calling application,both callers need;

- A computer with speaker(or a headset) and a microphone(the webcam has built-in microphone);
- A broadband Internet connection(e.g.,DSL,T1,or cable);
- Please check your preferred video calling application requirements, (requirements may vary between different applications,but usually a minimun of 2Mbps upload speek is required);

QUESTIONS & ANSWERS

Q:How do I know if my camera is recognized by the operating system?
A:Connect the camera in any USB2.0/3.0 port.Once the camera is connected,it takes a few moments before the camera is recognized. To ensure the camera has installed correctly,check the following: UnderControl Panel>System and Security>System>Device Manager

Q:How do I know if my video calling application is using my webcam?
A:All video application have an option setting to review the audio and video device.Using the video application review the followings:

- The Audio selection to ensure the USB2.0 camera microphone is selected.If not, change the selection to USB2.0 camera.
- The video selection to ensure the USB2.0 is selected.If not, change the selection to the USB 2.0 camera.

Scan QR Code
to follow
Thronmax
on social media

©2020 Thronmax Ltd. and affiliated companies. All rights reserved.
Thronmax and other trademarks contained herein are the property of Thronmax Ltd. and affiliated companies, registered in the United States or other countries. All other trademarks are the property of theirs respective owners.
Address: Rm 1202 12/F Tung Chun Comm Center 438-444 Shenghai Street,
Kowloon City, Hong Kong Email: support@thronmax.com