trovaprezzi.it

Questo manuale d'istruzione è fornito da trovaprezzi.it. Scopri tutte le offerte per La Nordica Giusy Evo Plus Nero o cerca il tuo prodotto tra le migliori offerte di Stufe, Camini e Riscaldamento

Extraflame®

Riscaldamento a Pellet

PELLET STOVES USER MANUAL

GIUSY - GIUSY PLUS - KETTY - SERAFINA

MADE IN ITALY
design & production

004276735 - Rev 000

ENGLISH/INGLESE

ATTENTION

SURFACES CAN BECOME VERY HOT!
ALWAYS USE PROTECTIVE GLOVES!

During combustion, thermal energy is released that significantly increases the heat of surfaces, doors, handles, controls, glass, exhaust pipes, and even the front of the appliance. Avoid contact with those elements if not wearing protective clothing (protective gloves included). Make sure children are aware of the danger and keep them away from the stove during operation.

ENGLISH **4**

WARNINGS **4**
SAFETY **4**
ROUTINE MAINTENANCE **5**
INSTALLATION **6**
GENERAL 6
PELLETS AND FEEDING **8**
HOT AIR DUCTING **9**
ADDITIONAL THERMOSTAT FUNCTIONING FOR DUCTING MOTOR CONTROL 9
THE DISPLAY DESCRIPTION OF CONTROLS AND SYMBOLS **10**
DISPLAY ICONS KEY 10
MENU STRUCTURE 11
BASIC INSTRUCTIONS **11**
REMOTE CONTROL (OPTIONAL) **12**
TYPE AND REPLACEMENT OF BATTERIES 12
COMMISSIONING SETTINGS **12**
MAINS FREQUENCY 50/ 60HZ 12
ADJUSTING TIME, DAY, MONTH AND YEAR 13
ADJUSTING LANGUAGE 13
FUNCTIONING AND LOGIC **14**
EASY SETUP 15
STAND-BY 15
RESET 16
COMFORT 16
ENABLE CHRONO **16**
CHRONO **16**
PROGRAMMING EXAMPLE 17
CLEANING AND MAINTENANCE **18**
MAINTENANCE **18**
CLEANING AND MAINTENANCE BY THE USER 18
ROUTINE MAINTENANCE CARRIED OUT BY AUTHORISED TECHNICIANS **22**
PUTTING THE EQUIPMENT OUT OF SERVICE (END OF THE SEASON) 22
DISPLAYS **25**
ALARMS **26**
GUARANTEE TERMS **27**

We thank you for having chosen our company; our product is a great heating solution developed from the most advanced technology with top quality machining and modern design, aimed at making you enjoy the fantastic sensation that the heat of a flame gives, in complete safety.

WARNINGS

This instructions manual is an integral part of the product: make sure that it always accompanies the appliance, even if transferred to another owner or user, or if transferred to another place. If it is damaged or lost, request another copy from the area technician. This product is intended for the use for which it has been expressly designed. The manufacturer is exempt from any liability, contractual and extracontractual, for injury/damage caused to persons/animals and objects, due to installation, adjustment and maintenance errors and improper use.
Installation must be performed by qualified staff, which assumes complete responsibility for the definitive installation and consequent good functioning of the product installed. One must also bear in mind all laws and national, regional, provincial and town council Standards present in the country in which the appliance has been installed, as well as the instructions contained in this manual.
The Manufacturer cannot be held responsible for the failure to comply with such precautions.
After removing the packaging, ensure that the content is intact and complete. Otherwise, contact the dealer where the appliance was purchased.
All electric components that make up the product must be replaced with original spare parts exclusively by an authorised after-sales centre, thus guaranteeing correct functioning.

SAFETY

- **THE APPLIANCE MAY BE USED BY CHILDREN 8 YEARS OF AGE OR OLDER AND INDIVIDUALS WITH REDUCED PHYSICAL, SENSORY, OR MENTAL CAPACITIES OR WITHOUT EXPERIENCE OR THE NECESSARY KNOWLEDGE, PROVIDED THAT THEY ARE SUPERVISED OR HAVE RECEIVED INSTRUCTIONS ON SAFE USE OF THE APPLIANCE AND THAT THEY UNDERSTAND THE INHERENT DANGERS.**
- **THE GENERATOR MUST NOT BE USED BY PERSONS (INCLUDING CHILDREN) WITH REDUCED PHYSICAL, SENSORY AND MENTAL CAPACITIES OR WHO ARE UNSKILLED PERSONS, UNLESS THEY ARE SUPERVISED AND TRAINED REGARDING USE OF THE APPLIANCE BY A PERSON RESPONSIBLE FOR THEIR SAFETY.**
- **THE CLEANING AND MAINTENANCE REQUIRED BY THE USER MUST NOT BE PERFORMED BY CHILDREN WITHOUT SUPERVISION.**
- **CHILDREN MUST BE CHECKED TO ENSURE THAT THEY DO NOT PLAY WITH THE APPLIANCE.**
- **DO NOT TOUCH THE GENERATOR WHEN YOU ARE BAREFOOT OR WHEN PARTS OF THE BODY ARE WET OR DAMP.**
- **THE SAFETY AND ADJUSTMENT DEVICES MUST NOT BE MODIFIED WITHOUT THE AUTHORISATION OR INDICATIONS OF THE MANUFACTURER.**
- **DO NOT PULL, REMOVE, TWIST THE ELECTRICAL CABLES COMING OUT OF THE PRODUCT EVEN IF IT IS DISCONNECTED FROM THE MAINS.**
- **IT IS ADVISED TO POSITION THE POWER SUPPLY CABLE SO THAT IT DOES NOT COME INTO CONTACT WITH HOT PARTS OF THE APPLIANCE.**
- **THE POWER SUPPLY PLUG MUST BE ACCESSIBLE AFTER INSTALLATION.**
- **DO NOT CLOSE OR REDUCE THE DIMENSIONS OF THE AIRING VENTS IN THE PLACE OF INSTALLATION. THE AIRING VENTS ARE ESSENTIAL FOR CORRECT COMBUSTION.**

- **DO NOT LEAVE THE PACKAGING ELEMENTS WITHIN REACH OF CHILDREN OR UNASSISTED DISABLED PERSONS.**
- **THE HEARTH DOOR MUST ALWAYS BE CLOSED DURING NORMAL FUNCTIONING OF THE PRODUCT.**
- **WHEN THE APPLIANCE IS FUNCTIONING AND HOT TO THE TOUCH, ESPECIALLY ALL EXTERNAL SURFACES, ATTENTION MUST BE PAID**
- **CHECK FOR THE PRESENCE OF ANY OBSTRUCTIONS BEFORE SWITCHING THE APPLIANCE ON FOLLOWING A PROLONGED PERIOD OF INACTIVITY.**
- **THE GENERATOR HAS BEEN DESIGNED TO FUNCTION IN ANY CLIMATIC CONDITION. IN PARTICULARLY ADVERSE CONDITIONS (STRONG WIND, FREEZING) SAFETY SYSTEMS MAY INTERVENE THAT SWITCH THE GENERATOR OFF. IF THIS OCCURS, CONTACT THE TECHNICAL AFTER-SALES SERVICE AND ALWAYS DISABLE THE SAFETY SYSTEMS.**
- **IN THE EVENT THE FLUE CATCHES FIRE, USE SUITABLE SYSTEMS FOR SUFFOCATING THE FLAMES OR REQUEST HELP FROM THE FIRE BRIGADE.**
- **THIS APPLIANCE MUST NOT BE USED TO BURN WASTE**
- **DO NOT USE ANY FLAMMABLE LIQUIDS FOR IGNITION**
- **DURING THE FILLING PHASE DO NOT PUT THE BAG OF PELLETS TO INTO CONTACT WITH THE PRODUCT**
- **THE MAJOLICAS ARE TOP QUALITY ARTISAN PRODUCTS AND AS SUCH CAN HAVE MICRO-DOTS, CRACKLES AND CHROMATIC IMPERFECTIONS. THESE FEATURES HIGHLIGHT THEIR VALUABLE NATURE. DUE TO THEIR DIFFERENT DILATION COEFFICIENT, THEY PRODUCE CRACKLING, WHICH DEMONSTRATE THEIR EFFECTIVE AUTHENTICITY. TO CLEAN THE MAJOLICAS, IT IS RECOMMENDED TO USE A SOFT, DRY CLOTH. IF A DETERGENT OR LIQUID IS USED, THE LATTER COULD PENETRATE INSIDE THE CRACKLES, HIGHLIGHTING THEM.**

ROUTINE MAINTENANCE

Based on Decree 22 January 2008 n°37 art.2, routine maintenance means interventions aimed at reducing degradation due to normal use, as well as dealing with accidental events entailing the need of first interventions, which however do not modify the structure of the system upon which one is intervening or its intended use according to the requirements laid down by the technical standards in force and by the manufacturer's use and maintenance manual.

INSTALLATION

GENERAL

The flue gas exhaust and hydraulic connections must be carried out by qualified personnel who must issue installation conformity documentation compliant with national standards.
The installer must provide the owner or person acting for him, according to the legislation in force, with the declaration of conformity, supplied with:

1) the use and maintenance manual of the appliance and of the system components (such as for example, the smoke ducts, chimney, etc.);
2) photocopy or photograph of the chimney plaque;
3) system booklet (where applicable).

The installer must ask to be issued with a receipt stating that the documentation has been provided, and must keep it with a copy of the technical documentation relating to the installation.
For installation in a condominium, prior approval from the condominium's administrator must be requested.
Where required, check the exhaust gas emissions after installation. Should a sampling point be installed, it must be airtight.

COMPATIBILITY

Installation in premises with fire hazards is forbidden. Installation in residential premises (except for sealed operation appliances) is also forbidden:

- in which there are liquid fuel-operated appliances with continuous or intermittent operation, which draw the combustion air in the room in which they are installed, or
- in which there are type B gas appliances intended for room heating, with or without production of domestic hot water and in adjacent and adjoining premises, or
- in which, in any case, the depression measured during installation between the internal and external environment is greater than 4 Pa

INSTALLATIONS IN BATHROOMS, BEDROOMS AND STUDIO FLATS

Installation in bathrooms, bedrooms and studio flats is only allowed for sealed or closed hearth appliances with ducted combustion air taken from the outside.

POSITIONING AND SAFETY DISTANCES

The support surfaces and/or points must have a suitable capacity to bear the overall weight of the appliance, accessories and coverings. If the floor is made of a combustible material, we recommending using a non-combustible material to protect the front part from any burnt material which might fall during routine cleaning operations.
The generator must be level to function properly.

The adjacent, side and rear walls and the supporting surface must be made of non-combustible material. Installation adjacent to combustible or heat sensitive materials is allowed as long as there is a suitable safety distance in between, which for pellet stoves is:

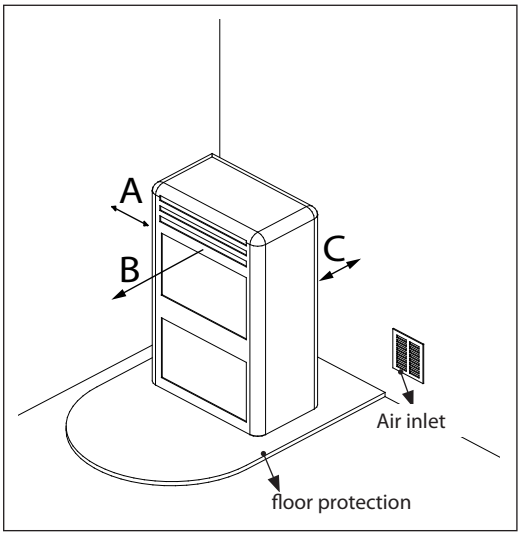

REFERENCES	INFLAMMABLE OBJECTS	NON-INFLAMMABLE OBJECTS
A	200 mm	100 mm
B	1500 mm	750 mm
C	200 mm	100 mm

INSTALLING INSERTS

When installing inserts, access must be prevented to the internal parts of the appliance and it must not be possible to access live parts during extraction operations.
Any wiring, for example the power cable or room probe, must be positioned so as not to be damaged during movement of the insert and must not come into contact with hot parts.

VENTILATION AND AERATION OF THE INSTALLATION PREMISES

Ventilation is deemed sufficient when the room is equipped with air inlets according to the table:

Appliance categories	Reference standard	Percentage of the net opening section with respect to the appliance fumes outlet section	Minimum net opening value of the ventilation duct
Pellet stoves	UNI EN 14785	-	80 cm²
Boilers	UNI EN 303-5	50%	100 cm²

In any case ventilation is deemed sufficient when the pressure difference between the external and internal environment is equal to or less than 4 Pa.

In the presence of type B gas appliances with intermittent operation not intended for heating, they must have their own aeration and/or ventilation opening.

The air inlets must meet the following requirements:
- they must be protected with grids, metal mesh, etc., but without reducing the net useful section;
- they must be made so as to make the maintenance operations possible;
- positioned so that they cannot be obstructed;

The clean and non-contaminated air flow can also be obtained from a room adjacent to that of installation (indirect aeration and ventilation), as long as the flow takes place freely through permanent openings communicating with the outside.
The adjacent room cannot be used as a garage, or to store combustible material or for any other activity with a fire hazard, bathroom, bedroom or common room of the building.

FLUE GAS EXHAUST

The heat generator works in depression and is equipped with an outlet fan for flue gas extraction. There must be a single exhaust system for the generator. Using a flue that is shared with other devices is not allowed.

The components of the flue gas exhaust system must be chosen in relation to the type of appliance to be installed in compliance with:
- UNI/ TS 11278 in the event of metal chimneys, with particular attention to that stated in the specification;
- UNI EN 13063-1 and UNI EN 13063-2, UNI EN 1457, UNI EN 1806 in the event of non-metallic chimneys.
- The length of the horizontal section must be minimal and, in any case, no longer than 3 metres, with a minimum upward slope of 3%
- There must not be more than 4 direction changes including the one due to the use of the "T" element.
- A "T" fitting with a condensation collection cap must be provided at the base of the vertical section.
- If the exhaust is not inserted in an existing flue, a vertical section with a windproof end piece is required (UNI 10683).
- The vertical duct can be inside or outside the building. If the smoke duct is inserted in an existing flue, it must be certified for solid fuel.
- If the smoke duct is outside the building, it must always be insulated.
- The smoke ducts must have at least one airtight inlet for flue gas sampling.
- All the sections of the flue gas duct must be accessible to inspection.
- Inspection openings must be provided for cleaning.
- If the generator has a fume temperature lower than 160°C+ ambient temperature caused by the high yield (contact technicians) it MUST be resistant to humidity.

CHIMNEY CAP

The chimney caps must meet the following requirements:
- they must have a useful outlet section no less than double that of the chimney/ducted system on which it is installed;
- they must be adapted in order to prevent the penetration of rain and snow in the chimney/ducted system;
- they must be built so that, in the event of winds coming from all directions and from any angle, the expulsion of combustion products is in any case ensured;

EXAMPLES OF CORRECT CONNECTION TO THE CHIMNEY

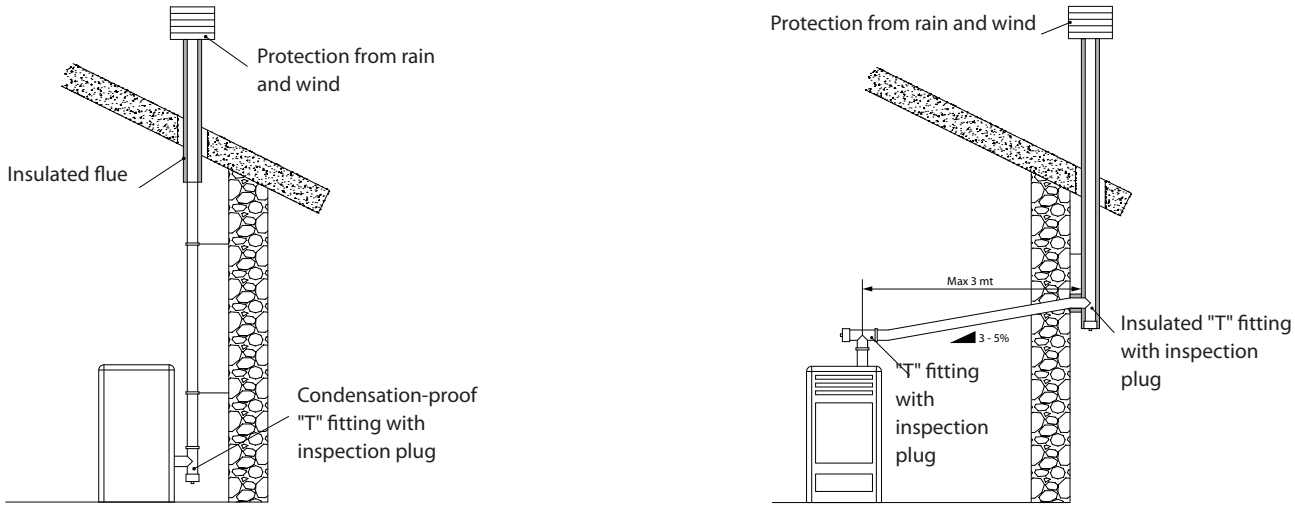

CONNECTION TO THE MAINS ELECTRIC SUPPLY
The generator is supplied with an electric power cable to be plugged into a 230V 50 Hz socket, possibly with a circuit breaker switch. The socket must be easily accessible.
The electrical system must be compliant with standards. The efficiency of the earthing circuit must be checked. Unsuitable earthing of the system can cause malfunctioning for which the manufacturer will not be held liable.
Power supply variations beyond 10% can cause faulty operation of the product.

PELLETS AND FEEDING

Pellets are made by applying high pressure to sawdust, or wood waste products (not containing paint) from sawmills, carpentry and other activities related to processing and working with wood. Given that it does not use any glue to hold it together this type of fuel is completely environmentally friendly. In fact the compactness of the pellets over time is guaranteed by a natural substance found in the wood itself: wood coal. In addition to being an environmentally friendly fuel in that it pushes wood residues to the limits pellets also have technical advantages. While wood has a calorific value of 4.4kWh/kg. (with 15% humidity after around 18 months of seasoning) the calorific value of pellets is 5 kWh/kg. Pellet density is 650kg/m3 and the water content is equal to 8% of its weight. For this reason they do not require seasoning in order to arrive at a sufficiently adequate degree of heat yield.

The pellets used must comply with the characteristics described by the following standards:

- **EN PLUS - UNI EN 14961 - 2 (UNI EN ISO 17225-2) class A1 - A2**

The manufacturer always recommended using pellets with a diameter of 6 mm with its products.

PELLET STORAGE

In order to ensure problem-free combustion pellets must be stored in a dry place.
Open the tank lid and load the pellets using a scoop.

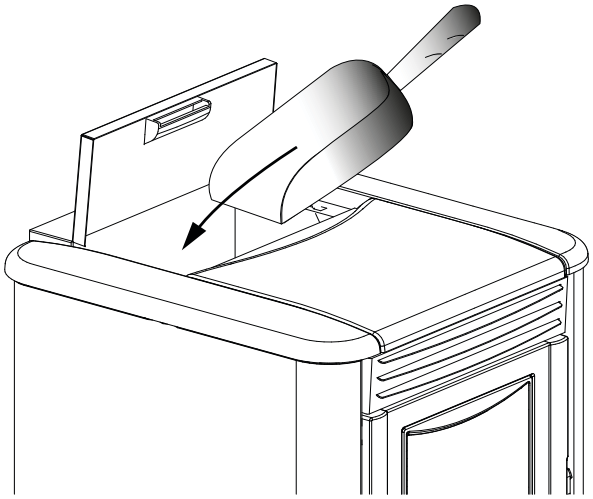

THE USE OF EXPIRED PELLETS OR ANY OTHER MATERIAL WILL AFFECT THE FUNCTIONALITY OF YOUR GENERATOR AND MAY LEAD TO THE TERMINATION OF THE WARRANTY AND CESSATION OF ANY ACCOMPANYING RESPONSIBILITY ON THE PART OF THE MANUFACTURER

HOT AIR DUCTING

- The pipe destined for ducting the hot air must have an internal diameter of 80 mm, be insulated and protected from heat loss.
- The length must not exceed 6 metres.
- **Installation of the pipes used for ducting the hot air must be performed by qualified staff and/or the manufacturer's technical after-sales assistance.**

GIUSY PLUS	VIVIANA PLUS
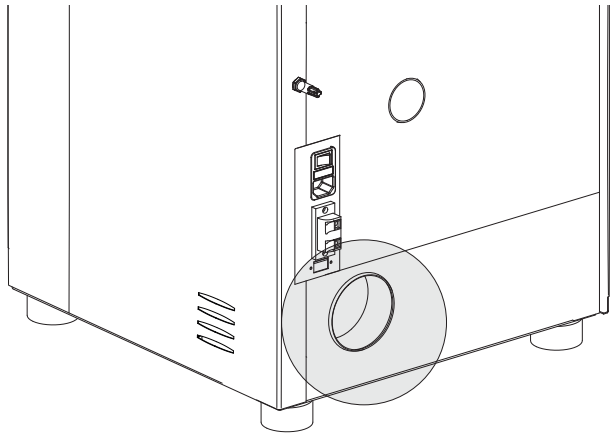	The ducting extension is found in the accessory pack inside the stove. It is mounted by means of the 4 supplied screws. 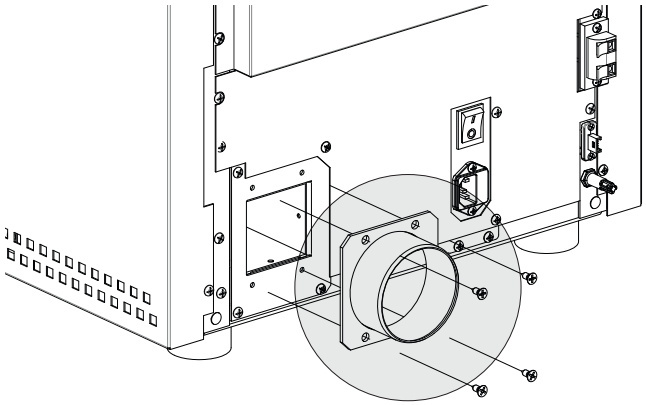

FOR THIS PRODUCT IT IS MANDATORY TO DUCT THE HOT AIR. IT IS NOT POSSIBLE TO DEACTIVATE THE DUCTING MOTOR. DO NOT COVER OR CLOSE DUCTING!

ADDITIONAL THERMOSTAT FUNCTIONING FOR DUCTING MOTOR CONTROL

For models with ducting motor there is also the possibility of thermostatting the motor itself. The connection of an external thermostat will allow to control the ducting motor independently from stove functioning.
At this point just set the desired temperature on the thermostat. The thermostat will control the functioning of the second motor:

- with temperature to be reached (closed contact) the second motor will follow the trend of the stove.
- when the temperature has been reached (open contact), it takes the ducting motor to 1st speed and will be displayed by the flashing LED relative to the ducting motor.

The ducting thermostat clamp is fitted with jumper as per standard.

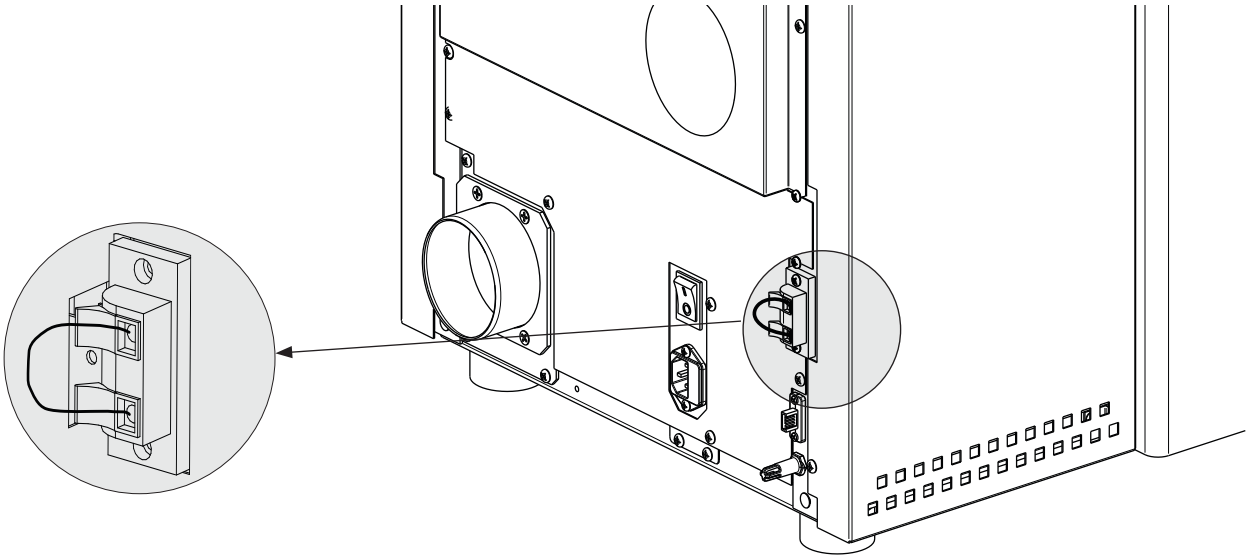

THE DISPLAY DESCRIPTION OF CONTROLS AND SYMBOLS

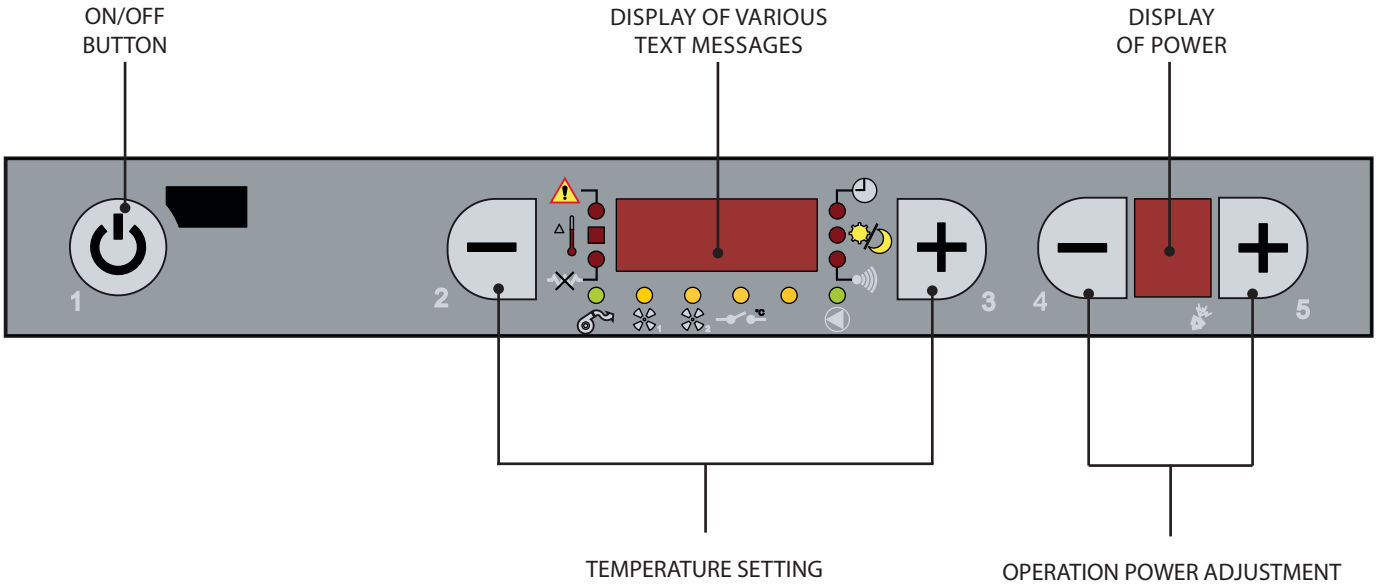

DISPLAY ICONS KEY

	Indicates the presence of an alarm. On: indicates the presence of an alarm Off: indicates the absence of alarms Flashing: indicates the deactivation of the depression sensor.		It indicates weekly programming operation Indicator on = weekly programming active Indicator off = weekly programming not active
	Indicates the room temperature status Off = the T° read by the probe is over the set temperature set On = the T° read by the probe is below the set temperature		indicates the stby function Off = stby deactivated On = stby activated
	Ign-plug Off = ign-plug active On = ign-plug deactivated Flashing = ignition phase		Not used
	It indicates functioning of the fumes motor Off = fumes motor not working On = fumes motor working Flashing = breakdown		it indicates the communication between remote control and stove. Every time a key is pressed on the remote control the indicator must switch on. if the indicator is always on it indicates that the communication between remote control and stove is blocked.*
	it indicates functioning of the tangential fan Off = not working On = working Flashing = The motor is operating in COMFORT momde (where present)		Not used
	Not used		Additional ducted thermostat input status: On: closed contact (to be reached) Flashing: the motor is running at minimum, in modulation mode (input=open)
			It indicates the operation of the pellet feed motor. Off = pellet feed motor deactivated On = pellet feed motor active.

MENU STRUCTURE

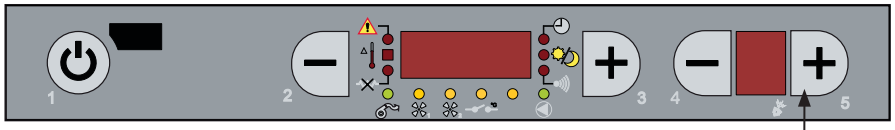

Key 1 to confirm parameter/ programming and exit.

Keys 2 and 3 to set data/parameters.

Keys 4 and 5 to go forward or backward in the menu.

To access the menu, keep key 5 pressed for a few seconds.

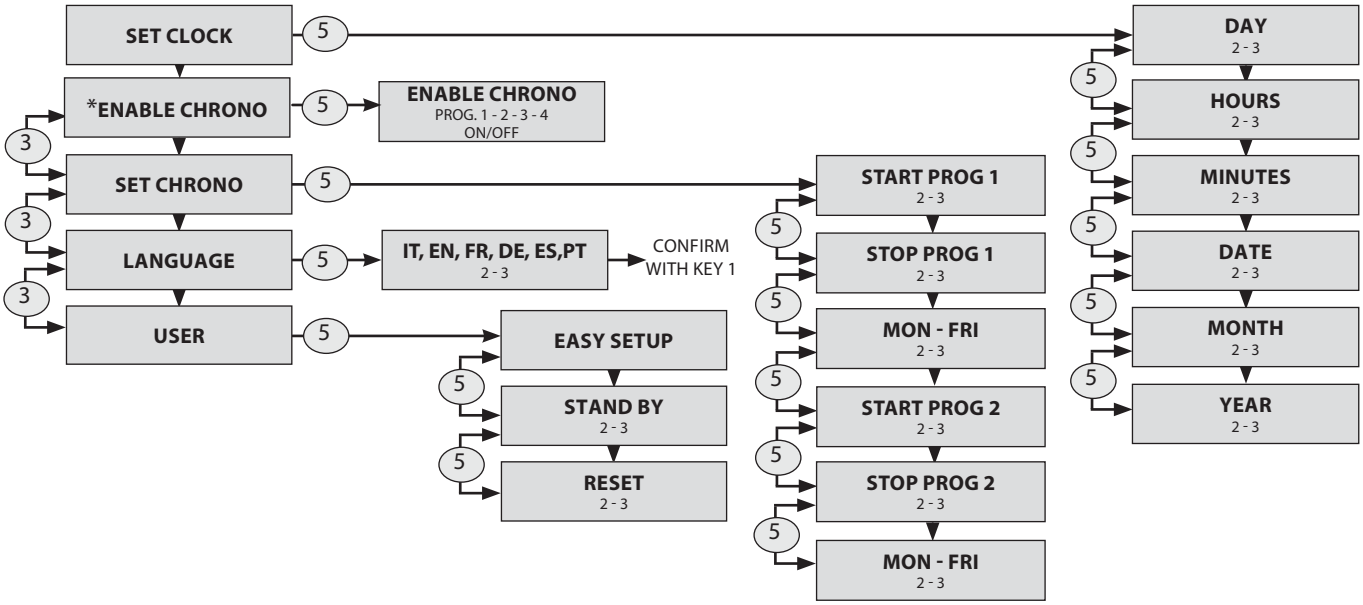

** Where present – certain models.*
When "ENABLE CHRONO" is not included in the menu, enabling is done directly in SET CHRONO.

BASIC INSTRUCTIONS

The following recommendations must be followed the first times the stove is ignited:

- It is possible that slight odours are produced due to the drying of the paints and silicones used. Do not remain in the environment for long periods.
- Do not touch the surfaces as they could still be unstable.
- Air the room well several times.
- The hardening of the surfaces is terminated after several heating processes.
- This appliance must not be used to burn waste.

Before igniting the stove, the following points must be verified:

- the feed-box must be full of pellets.
- the combustion chamber must be clean.
- The burn pot must be completely free and clean.
- check the hermetic closure of the fire door and the ash drawer.
- make sure the power supply cable is connected correctly.
- the bipolar switch in the rear right part must be positioned on 1.

DO NOT USE ANY INFLAMMABLE LIQUIDS FOR IGNITION!
DO NOT ALLOW THE BAG OF PELLETS TO COME INTO CONTACT WITH THE BOILING HOT STOVE DURING THE FILLING PHASE!
IN THE EVENT OF CONTINUOUS NO IGNITION, CONTACT AN AUTHORISED TECHNICIAN.

IT IS FORBIDDEN TO USE THE APPLIANCE WITHOUT THE DIVIDER AND/OR GLASS PROTECTION (SEE FIGURE AT THE SITE) JEOPARDISES THE SAFETY OF THE PRODUCT AND LEADS TO THE IMMEDIATE VOIDING OF THE WARRANTY PERIOD. IN THE CASE OF WEAR OR DETERIORATION REQUEST AFTER-SALES ASSISTANCE FOR REPLACEMENT OF THE PART (REPLACEMENT THAT IS NOT UNDER GUARANTEE AS THE COMPONENT IS SUBJECT TO WEAR).

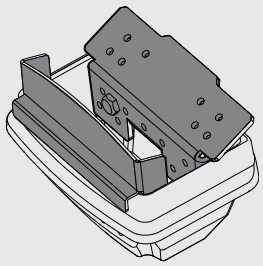

REMOTE CONTROL (OPTIONAL)

The heating power, the desired room temperature and the appliance ignition/switch off, can be adjusted using the remote control.

To ignite the stove, press key 1 for a few seconds; the appliance will automatically enter the ignition phase. It is possible to adjust power by using keys 4 and 5, whereas the desired temperature can be adjusted using keys 2 and 3. To switch the stove off, press and hold key 1 for a few seconds.

TYPE AND REPLACEMENT OF BATTERIES

The batteries are housed in the lower part of the remote control. To replace it remove the battery-holder (as shown in the figure on the back of the remote control), remove or insert the battery following the symbols on the remote control and on the battery.

If the remote control is off because it has no batteries, the stove can be controlled from the control panel on top of it.
While replacing the battery, pay attention to the polarity by observing the symbol on the inside compartment of the remote control.

For operation, 1 CR2025, 3V lithium buffer battery is required.

THE BATTERIES USED CONTAIN METALS HARMFUL FOR THE ENVIRONMENT. THEY MUST THEREFORE BE DISPOSED OF SEPARATELY IN APPROPRIATE CONTAINERS.

COMMISSIONING SETTINGS

Once the power cable at the back of the stove has been connected, move the switch, also located on the back, to (I).
The switch at the back of the stove powers the stove board.
The stove remains off and a first screen appears on the panel reading OFF.

MAINS FREQUENCY 50/ 60HZ

In the event the stove is installed in a country with 60Hz frequency, the stove will display "frequenza rete errata" ("mains frequency incorrect"). Vary the frequency as described below.

CONTROLS PROCEDURE

- Press key 5.
- Select 50 - 60Hz frequency with key 2 -3.
- Confirm using key 5 and exit the menu by pressing key 1.

ADJUSTING TIME, DAY, MONTH AND YEAR

Set clock allows to adjust the time and date

CONTROLS PROCEDURE

- Press key 5 for a few seconds, until **SET CLOCK** appears.
- Confirm using key 5.
- Use key 3 to select the day.
- Press key 5.
- Use the same procedure (5 to move forward 3 to set) to adjust the hours, minutes, day, month and year.
- Press key 1 several times to confirm and exit the menu.

SET CLOCK	
DAY	MON, TUE, WED, ...SUN
HOURS	0...23
MINUTES	00...59
DATE	1...31
MONTH	1...12
YEAR	00...99

ADJUSTING LANGUAGE

It is possible to select the preferred language to display the various messages.

CONTROLS PROCEDURE

- Press key 5 for a few seconds, until SET CLOCK appears.
- Press key 3 twice until SET LANGUAGE appears.
- Confirm using key 5.
- Select the language using key 3.
- Press key 1 several times to confirm and exit the menu.

LANGUAGE	ITALIAN
	ENGLISH
	GERMAN
	FRENCH
	SPANISH
	PORTUGUESE

FAILURE TO IGNITE ALARM

THE FIRST IGNITION MAY FAIL SINCE THE AUGER IS EMPTY AND CANNOT ALWAYS LOAD THE BURN POT IN TIME WITH THE NECESSARY QUANTITY OF PELLETS FOR REGULAR FLAME IGNITION.

IF THE PROBLEM OCCURS AFTER A FEW MONTHS OF OPERATION, MAKE SURE THE ROUTINE CLEANING HAS BEEN PERFORMED CORRECTLY, AS INSTRUCTED IN THE STOVE MANUAL.

FUNCTIONING AND LOGIC

IGNITION
Once the points listed previously have been checked, press key 1 for three seconds to ignite the stove. 15 minutes are given for the ignition stage, after ignition and once the control temperature has been reached,
the stove interrupts the ignition phase and switches to the STARTING mode.

STARTING
During the start-up stage, the stove stabilises combustion, increasing it gradually, to then start ventilation and switch to the WORK mode.

WORK
During the work stage, the stove reaches the set power and works to reach the set room temperature. See following item

SET THERMOSTAT ADJUSTMENT
The room temperature setting can be set using buttons 4 and 5, from low-07 to 40°C -hot

LOW - HOT
if the temperature setting is on "low" (set below the 7°C threshold) the stove will always function at minimum.
If the setting is on "hot" (set above the 40°C threshold) the stove will not modulate, always functioning and only at the set power.

SET POWER ADJUSTMENT
The power setting features 5 operating levels, via button 5, (on) 1 and 2 (adjustment).
Power 1 = minimum level - Power 5 = maximum level.

WORK WITH ROOM PROBE (STANDARD)
The appliance controls the room temperature via a probe fitted on the appliance.
Once the the set temperature has been reached, it will automatically go to minimum or switch off activating the **Stand by** function, reducing pellet consumption to a minimum.
By default the **STBY** function is always set on **OFF** (light on).
For its activation and logic, follow the indications on the next page, Chapter: **Stand by.**

BURN POT CLEANING
During the work stage, the stove has an internal counter which cleans the burn pot after a set amount of time.
This stage will be shown on the display, it will bring the stove to a lower power level and will increase the fumes motor for a programmed amount of time.
when the cleaning stage is finished, the stove will continue its work, going back to the selected power level.

SWITCH-OFF
Press key 1 for three seconds.
when the operation has been performed, the appliance automatically enters the switch- off phase, blocking the supply of pellets.
The fumes motor and the hot air ventilation motor will remain on until the temperature of the stove has dropped below the factory parameters.

RE-IGNITION
The stove can only be re-ignited if the flue gas temperature has lowered and the preset timer has been reset to zero.

CLEAN CHECK UP 1 - 2

IF THE ALARM "CLEAN CHECK UP" ALARM IS PRESENT, IT IS NECESSARY TO MAKE SURE THAT THE BOTTOM OF THE BURNING POT IS FREE FROM RESIDUES OR DIRT. THE HOLES IN THE BOTTOM MUST BE COMPLETELY FREE, TO ENSURE CORRECT COMBUSTION.
IT IS POSSIBLE TO USE THE "EASY SETUP" FUNCTION TO ADJUST THE COMBUSTION DEPENDING ON THE REQUIREMENTS DESCRIBED. IF THE ALARM SIGNAL PERSISTS, AND THE ABOVE MENTIONED CONDITIONS HAVE BEEN CHECKED, CONTACT CUSTOMER SERVICE.

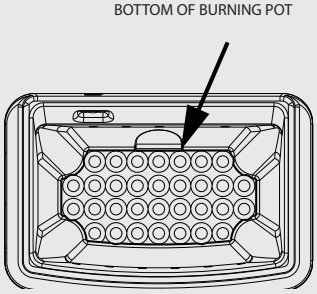

EASY SETUP

The volumetric weight of the pellet is the ratio between the weight and the volume of the pellet. This ratio can change while maintaining the quality of the pellet. By using the EASY SETUP function, it is possible to change the calibration of the volumetric weight, increasing or decreasing the pre-set values.
In the stove program, the values available go from "– 3"to "+ 3"; all the stoves are calibrated at the factory to the optimal value 0

If you notice an excessive deposit on the burner pot, enter the EASY SETUP program and lower the value by one unit to "- 1"; then wait for the following day and if there is no improvement, lower the value again up to a maximum of "- 3". Instead, should it be necessary to increase the calibration of the volumetric weight of the pellet, it is advisable to go from the default value "0" to "+ 1, + 2, + 3" as required.

EXCESSIVE DEPOSIT OF PELLETS IN THE BURNING POT			NORMAL OPERATION	LITTLE DEPOSIT OF PELLETS IN THE BURNING POT		
-3	-2	-1	0	+1	+2	+3
THIRD DECREASING RANGE IF THE FIRST TWO ARE NOT ENOUGH	SECOND DECREASING RANGE IF THE FIRST IS NOT ENOUGH	FIRST DECREASING RANGE (TEST FOR 1 DAY)	OPTIMAL DEFAULT VALUE	FIRST INCREASING RANGE	SECOND INCREASING RANGE IF THE FIRST IS NOT ENOUGH	THIRD INCREASING RANGE IF THE FIRST TWO ARE NOT ENOUGH

CONTROL PROCEDURE

- Press the key 5 for a few seconds; the message SET CLOCK will appear on display.
- Press the key 3 for several times to open the EASY SETUP page.
- Press the key 5 to confirm.
- Use the keys 2 and 3 to increase (3) or decrease (2) the value.
- Press the key 1 for several times to confirm and exit the menu.

N.B.: If these calibrations do not solve the problem, please contact your local customer service centre.

STAND-BY

The STBY function is used if immediate stove switch-off is required when the set temperature has been reached.
The STBY function can be set at ON or OFF using the procedure described further on.
In the factory the STBY function is always set at OFF (indicator off)

STBY FUNCTION SET AT ON

If the STBY function is active (ON), when the stove reaches the set room temperature and exceeds it by 2°C, it will switch off after a default delay time, displaying STAND - BY.
When the room temperature is 2°C lower than the setting, the stove will start to work again at the power set on the display, displaying WORK.

STBY FUNCTION SET AT OFF (DEFAULT SETTING)

If the stby function is not active (OFF), if the stove reaches the set room temperature, it will go to minimum, modulating and displaying MODULATION. When the room temperature is below the setting, it will start to work again at the set power, displaying WORK.

CONTROLS PROCEDURE

- press key 5 for a few seconds, until SET CLOCK appears.
- Press key 3 until "USER" appears.
- Press key 5 twice.
- Use key 2 or 3 "ON" to activate or "OFF" to de-activaate.
- Press key 1 several times to confirm and exit the menu.

RESET

Allows all values that can be modified by the user to be reset to the default values. The modified data is the following:

CONTROLS PROCEDURE

- Press key 5 until **SET CLOCK** appears.
- Press key 3 several times until **USER** appears.
- Press key 5.
- Press key 5 until "**RESET**" appears.
- Use keys 2-3 to select **ON** and press key 5.
- "**DONE**" will appear on the display to confirm.

COMFORT (in certain models)

This mode reduces the fan speed, making the stove quieter.

CONTROLS PROCEDURE

- To activate, press key 4 until **COMFORT ON** appears on the display.
- To de.activate, press key 4 until **COMFORT OFF** appears on the display.

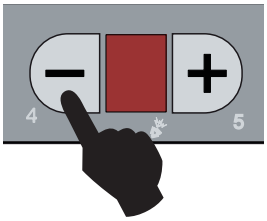

WHEN THE COMFORT MODE IS ACTIVE THE LED FOR FAN 1 WILL FLASH ON THE CONTROL PANEL.

WHEN THE COMFORT FUNCTION IS ACTIVATED USING KEY 4, THE STOVE WILL ALWAYS OPERATE AT REDUCED FAN SPEED!

ENABLE CHRONO

It allows to enable/disable the chrono and the various time slots. When enabling the time slots, besides activating (ON) and de-activating (OFF), it is also possible to select the COMFORT function for selected time slots.

CONTROLS PROCEDURE

- press key 5 for a few seconds, until **SET CLOCK** appears.
- Press key 3 several times to reach **ENABLE CHRONO**.
- Press key 5, to confirm and use keys 2-3 to enable "**ON**" or disable "**OFF**" the chrono.
- Use keys 4 -5 to select the desired time slot.
- Press keys 2 - 3 to enable "**ON**" or disable "**OFF**" the **COMFORT** mode for the selected time slot.
- Press key 1 several times to confirm and exit the menu.

CHRONO

The chrono allows to program 2 time spans within a day to use every day of the week.
The switch-on and switch-off time can be set in every time slot, along with the days of use of the programmed time slot.

RECOMMENDATIONS
The ignition and switch-off times must be within the arc of one day, from 0 to 24 and not over several days:
Before using the chrono function, set the current day and time. Therefore check that the points listed in the "*Set clock*" sub-chapter have been followed, so that the chrono function works. Aside from programming it, it must also be activated.

Example:

Switch-on time 07:00 **CORRECT**
Switch-off time 18:00

switch-on time 22:00 **INCORRECT**
Switch-off time 05:00

PROGRAMMING EXAMPLE

Let's suppose that the weekly programmer function is to be used and the 2 time slots are to be used in the following way:

- 1st time slot: from 08:00 to 12:00 every day of the week, with room temperature at 19°C, excluding Saturday and Sunday
- 2nd time slot: from 15:00 to 22:00 only on Saturday and Sunday, with room temperature at 21°C

CONTROLS PROCEDURE:

Press key 5 and SET CLOCK will appear.
Press key 2 until **ENABLE CHRONO** appears
- Enable the chrono
- Enable slot 1 and 2.
- Press key 1 to exit

SET CLOCK

ENABLE CHRONO

1ST TIME SLOT SWITCH-OFF
Using keys 2 - 3, enter the time "12:00", which corresponds to the switch-off time of the 1st time period. The STOP PRG1 text will appear followed by the time set.
To confirm and continue programming, press button 5. Press button 4 to go back to the previous parameter.

STOP PRG1

12:00

*** Where "ENABLE CHRONO" is not present in the menu, enabling is done directly in SET CHRONO.**

Press key 2 and **SET CHRONO** will appear.

SET CHRONO

ENABLING THE 1ST TIME SLOT DAYS
To do this, use keys 3 and 5 in the following way:
Key 5 - allows to scroll the various days, the scrolling text with the day of the week, followed by OFF.
Use key 3 to enable-disable (ON/OFF) all days.

MONDAY.. PRG1

ON-OFF

Press key 5 to confirm and continue programming.
The scrolling text
START PRG1 OFF will appear.

START PRG1

OFF

Press key 5 to confirm and continue programming.
The text START PRG2 OFF will appear.

START PRG2

ON-OFF

1ST TIME SLOT SWITCH-ON
Using keys 2 - 3, enter the time "08:00", which corresponds to the switch-on time of the 1st time span. The START PRG1 text will appear followed by the time set.
To confirm and continue programming, press button 5. Press button 4 to go back to the previous parameter.

START PRG1

08:00

2ND TIME SLOT SWITCH-ON
At this point, the second time slot must be programmed.
The sequence to be followed is the same and is repeated as per the 1ST TIME SLOT SWITCH-ON.

START PRG2

15:00

2ND TIME SLOT SWITCH-ON
At this point, the second time slot must be programmed.
The sequence to be followed is the same and is repeated as per the 1ST TIME SLOT SWITCH-ON.
On this occasion simply enter the time, for example start at 15:00 and Stop at 22:00 and to activate the days Saturday and Sunday by setting them at "ON".

WHEN THE WEEKLY PROGRAMMER IS ACTIVE, A BOX OF THE RELATIVE ICON WILL APPEAR ON THE CONTROL BOARD.

CLEANING AND MAINTENANCE

ALWAYS FOLLOW THE INSTRUCTIONS IN MAXIMUM SAFETY CONDITIONS!

- Make sue the power cable is unplugged since the generator could be programmed to start.
- That the generator is cold in its entirety.
- The ashes are completely cold.
- Ensure an effective exchange of air in the room during the cleaning of the product.
- A poor cleaning is detrimental to the proper functioning and safety!

MAINTENANCE

For correct operation, the generator must undergo routine maintenance by a **qualified technician** at least once a year.
The routine checks and maintenance operations must always be performed by **qualified** trained technicians in accordance with the applicable regulations in force and with the instructions provided in this use and maintenance manual.

EVERY YEAR MAKE THE EXHAUST FUMES, SMOKE DUCTS AND "T"-FITTINGS, INCLUDING CAPS AND INSPECTION DOORS BE CLEANED - IF ANY CURVES AND ANY HORIZONTAL SECTIONS!
THE CLEANING OF THE GENERATOR FREQUENCY IS APPROXIMATE! THEY DEPEND ON THE QUALITY OF THE PELLETS USED AND THE FREQUENCY OF USE.
IT CAN HAPPEN THAT THESE OPERATIONS SHOULD BE PERFORMED MORE FREQUENTLY.

CLEANING AND MAINTENANCE BY THE USER

Routine cleaning operations, as specified in this use and maintenance manual, must be performed with the utmost care according to the instructions, procedures and frequency intervals described in this use and maintenance manual

CLEANING THE SURFACES AND COVERING
Never use abrasive or chemically aggressive detergents for cleaning!
The surface cleaning must take place when both the generator and the coating are completely cold. For the maintenance of surfaces and metal parts, simply use a damp cloth with water or mild soap and water.
Failure to observe the instructions may damage the surface of the generator and invalidate the warranty.

CLEANING THE CERAMIC GLASS
Never use abrasive or chemically aggressive detergents for cleaning!
The cleaning of the ceramic glass is allowed only when the latter is completely cold.
To clean the ceramic glazing, simply use a dry brush and some damp newspaper dabbed in the ash. If the glazing is very dirty, only use a specific ceramic glazing detergent. Spray a modest amount onto a cloth and wipe the ceramic glazing.
Do not spray cleaner or any other liquid directly on the glass or on the gaskets.
Failure to observe the instructions may damage the surface of the ceramic glass and invalidate the warranty.

CLEANING THE TANK PELLETS
When the tank empties completely, unplug the power cord from the generator and remove residues (dust, chips, etc..) from the tank empty, before filling it.

DAILY

SCRAPERS:
Use the scrapers, moving upwards (for models with upper scrapers) or pulling and pushing them (for the inserts and models with front scrapers).
Please note: scrapers are preferably used when the stove is cold; if used when the stove is hot, it is recommended to use special gloves to protect against the heat as they can get very hot.

Open the door - Clean the glass with a damp cloth
Never spray the detergent or any other liquid used for cleaning directly on the ceramic glass

CLEANING THE BURN POT AND COMBUSTION CHAMBER

1. Vacuum the residues in the burn pot
2. Take out the burn pot from the designated compartment;
3. Vacuum the ash from the burn pot's seat and the combustion chamber (3.1)
4. Use the special poker supplied to clear the holes in the burn pot.
5. Place back the burn pot and push it towards the hearth wall.
6. If there is an ash collector tray, vacuum the ash deposits

PLEASE NOTE: USE A SUITABLE VACUUM CLEANER WITH A SPECIAL CONTAINER TO SEPARATE THE COLLECTED ASH.

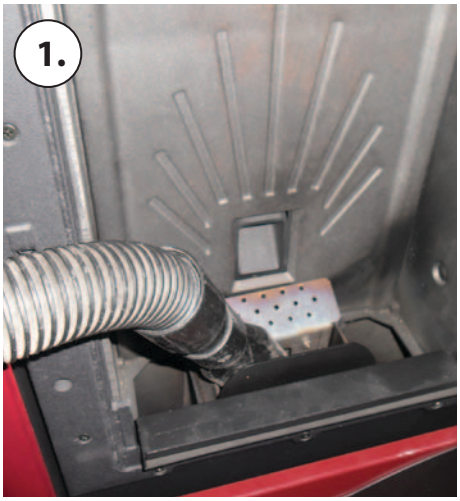

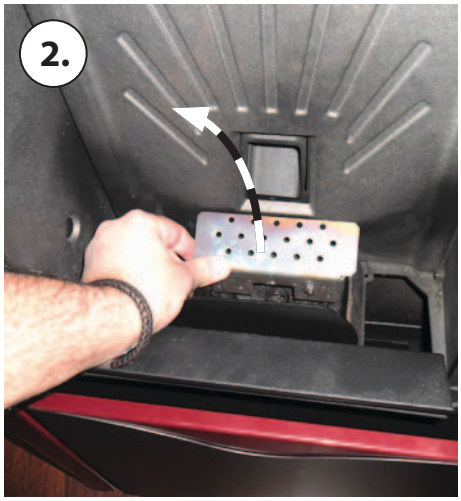

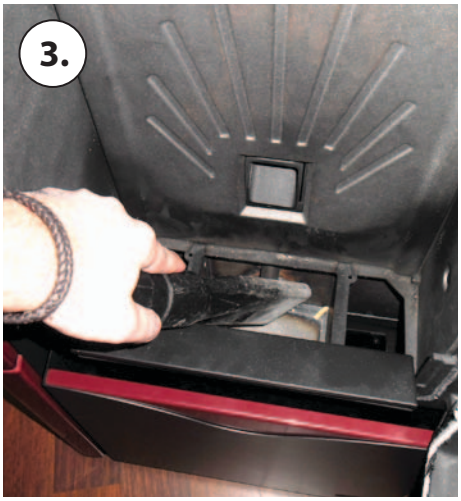

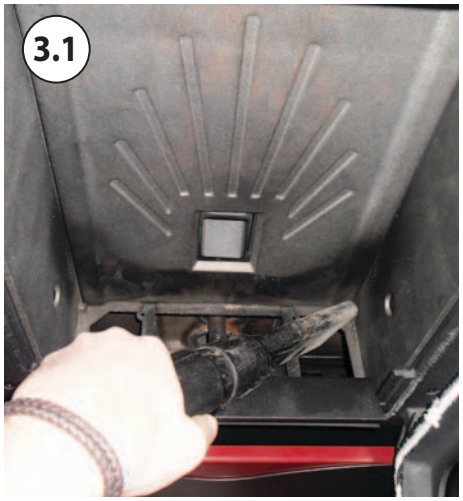

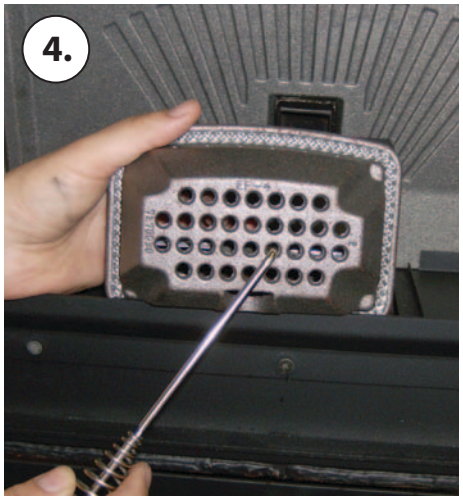

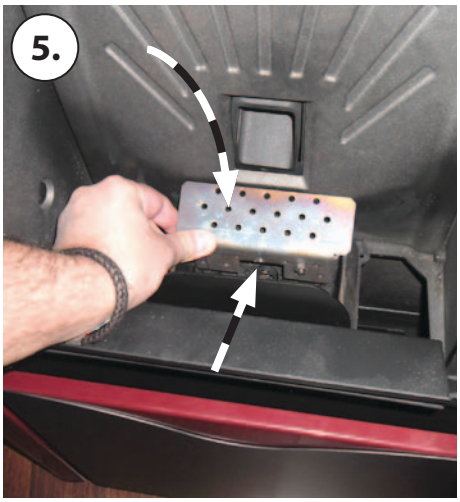

EVERY 3/4 DAYS - WEEKLY

ASH DRAWER
Every 3-4 days check the ash drawer and empty it at least one/twice a week.
If there is a lower door, open/remove it.
Take out the removable ash drawer and empty it in a special container.
Vacuum the area underneath the removable ash drawer. Once you have cleaned it, place back the removable drawer and close/place back the external door.
In some stoves the ash collector tray is located in the combustion chamber. In this case, just open the door and vacuum the ash from the tray.

MONTHLY

CLEANING THE HEAT EXCHANGER:
The heat exchangers chamber must be cleaned every month as the soot deposited on the rear of the hearth wall obstructs the regular flow of fumes, thereby affecting the performance and regular operation of the stove.
Open the door to access the combustion chamber. Take out the burn pot.
Remove or rotate, depending on the model, the upper lockbolt (A) the screws (B) or the wall lock (C) of the hearth wall (D), take out the hearth wall (E) and clean with the poker and a suitable vacuum cleaner (F).
When cleaning has been completed, reposition the removable hearth wall (D) and secure it again with the designated screws by turning the lockbolt in the opposite direction in relation to the one used to remove it or by placing back the hearth wall lock.
Place back the burn pot.

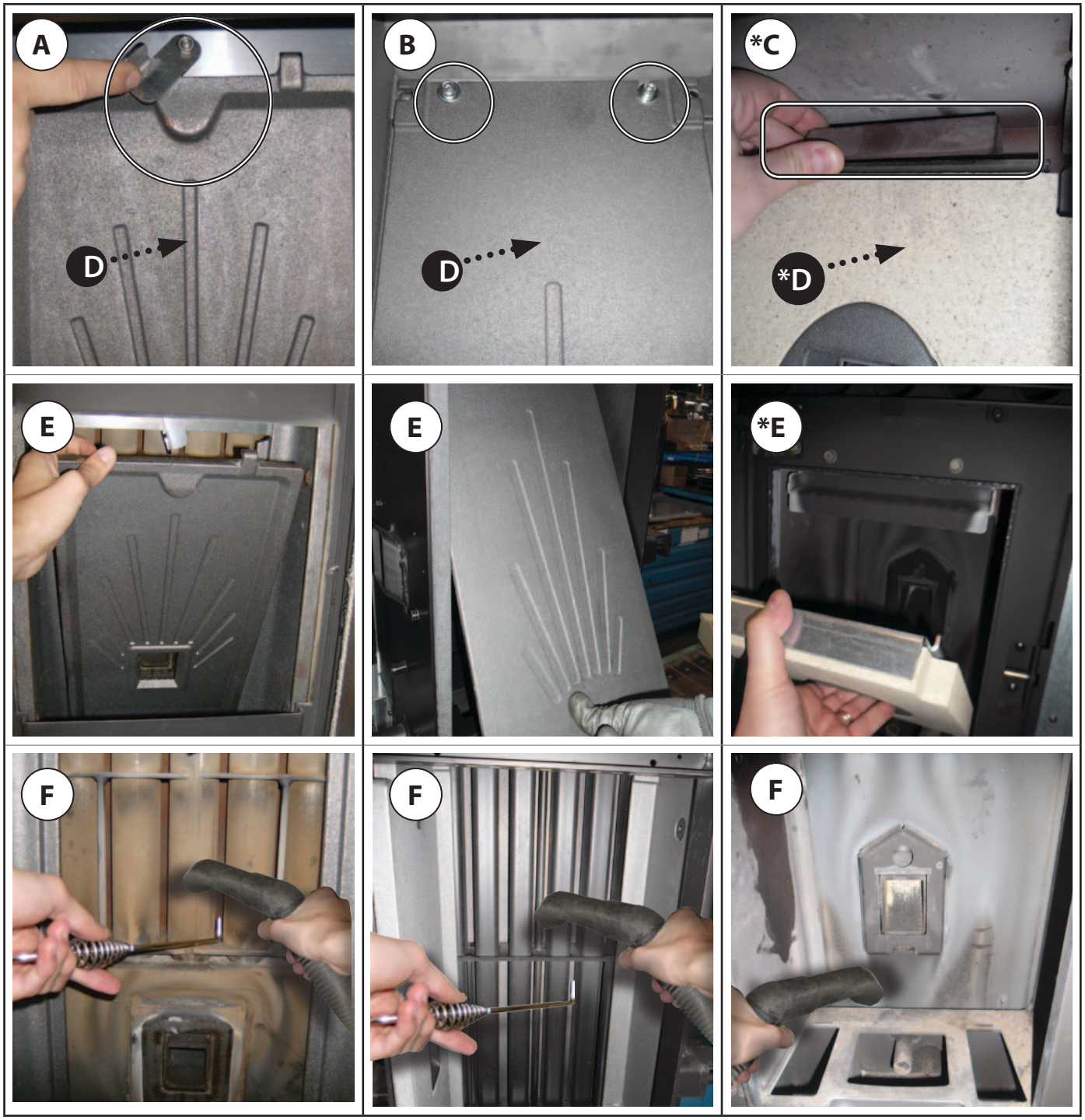
A
D
B
D
*C
*D
E
E
*E
F
F
F

ROUTINE MAINTENANCE CARRIED OUT BY AUTHORISED TECHNICIANS

Routine maintenance must be performed at least once a year.
As the generator uses pellets as solid fuel, it needs an annual routine maintenance interval that needs to be performed by an **authorised Technician by only using original spare parts**.
Failure to do so can affect the appliance's safety and you may no longer be entitled to the warranty conditions.
By following the cleaning schedule reserved to the user and reported in the user and maintenance manual, one ensures correct combustion in the generator over time, thereby preventing any anomalies and/or malfunctions that may require more work to be performed by the technician. Requests for routine maintenance are not covered by the product's warranty.

DOOR, ASH DRAWER AND BURN POT GASKETS
The gaskets ensure the tightness of the stove and its consequent proper operation.
They must be checked periodically: in the event they are worn or damaged they must be replaced immediately.
These operations must be carried out by a qualified technician.

CONNECTION TO THE FLUE
Vacuum and clean the pipe that leads to the flue yearly or whenever necessary. If there are horizontal sections, any residue must be removed before it obstructs the flue.

PUTTING THE EQUIPMENT OUT OF SERVICE (END OF THE SEASON)

At the end of every season, before turning off the stove, we recommend completely emptying the pellet tank and using a vacuum cleaner to clear up any pellets and dust residue inside it.
You should also disconnect the generator from the mains and, to ensure greater safety especially if there are any children around, remove the power supply cable.
Routine maintenance must be performed at least once a year.

IF THE POWER SUPPLY CABLE IS DAMAGED, IT MUST BE REPLACED BY THE AFTER-SALES SERVICE OR BY A SIMILARLY QUALIFIED PERSON, SO AS TO AVOID ALL RISKS.

The images are for illustration purposes

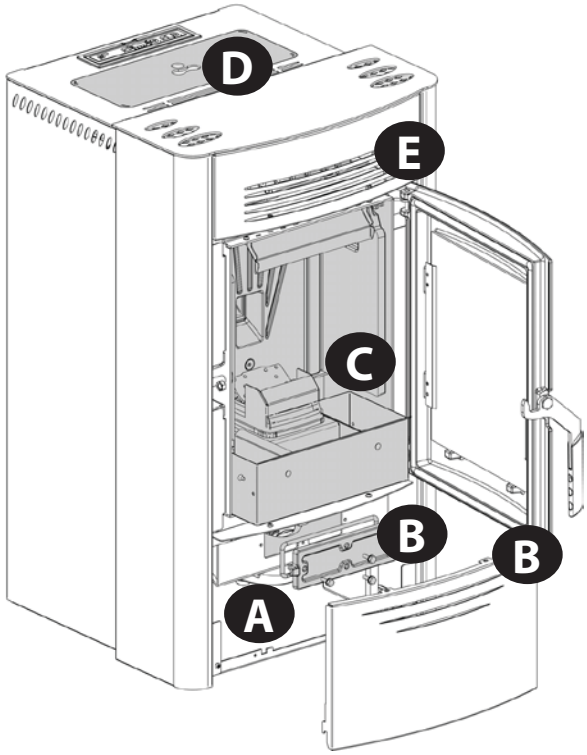

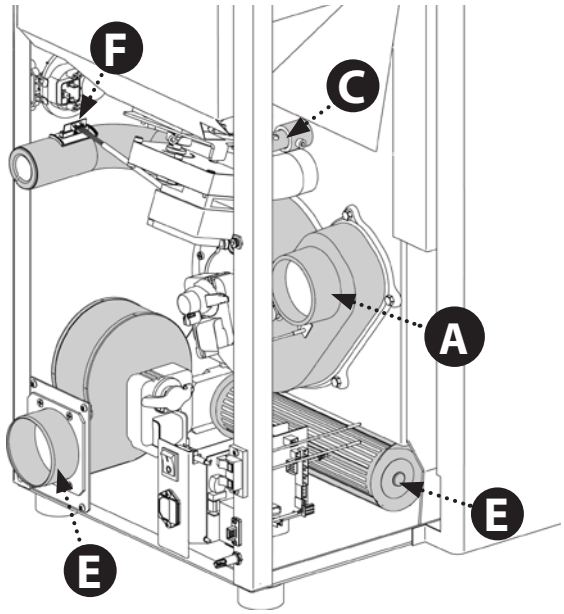

A	Fumes motor (disassembly and cleaning and fumes pipe), new silicone in required points
B	Inspection of gaskets, ash drawer and burn pot door (replace them and apply silicone where required)
C	Combustion chamber (total cleaning of the entire chamber) and ignition plug pipe cleaning
D	Tank (complete emptying and cleaning)
E	Room air fan disassembly and removal of dust and any pellet debris
F	Air intake pipe inspection and any flow sensor cleaning

The images are for illustration purposes.

A	Fumes motor (disassembly and cleaning and fumes pipe), new silicone in required points	✓
B	Inspection of gaskets, ash drawer and burn pot door (replace them and apply silicone where required)	✓
C	Combustion chamber (total cleaning of the entire chamber) and ignition plug tube cleaning	✓
D	Tank (complete emptying and cleaning).	✓
E	Room air fan disassembly and removal of dust and any pellet debris	✓
F	Air intake pipe inspection and of flow sensor cleaning	✓

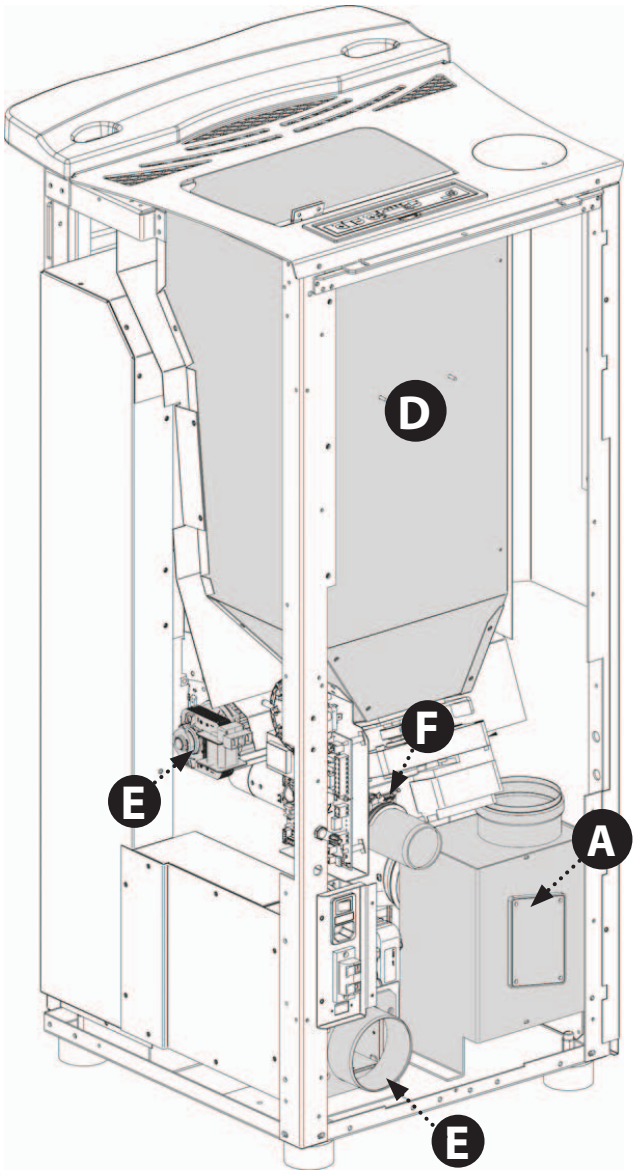

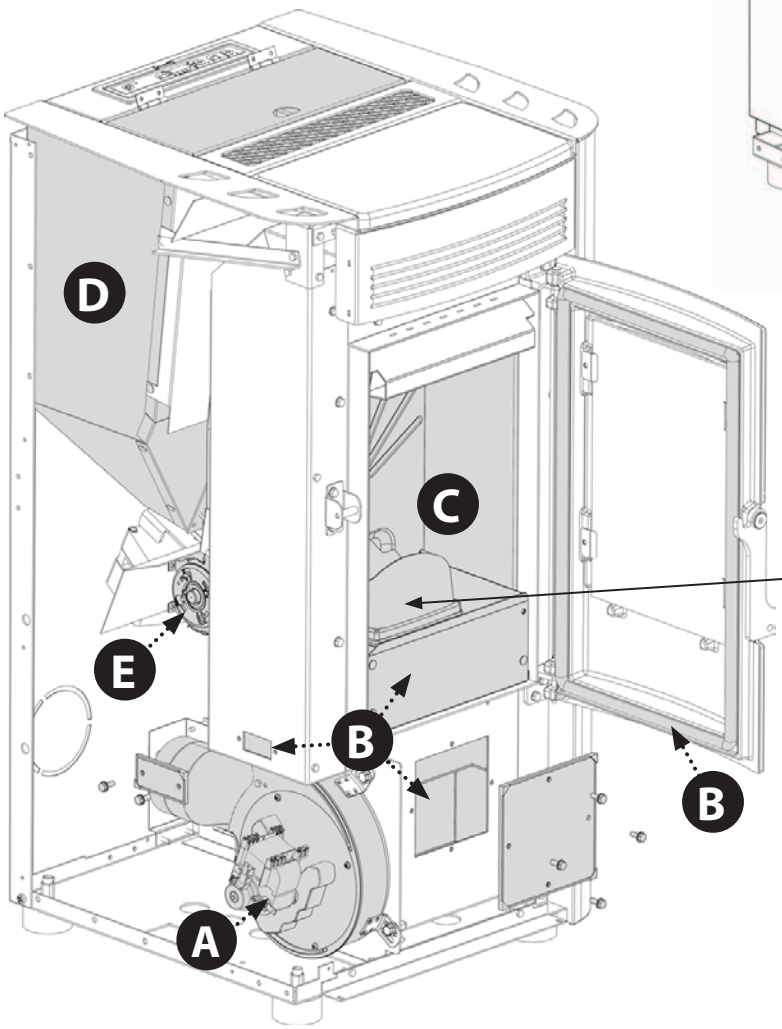

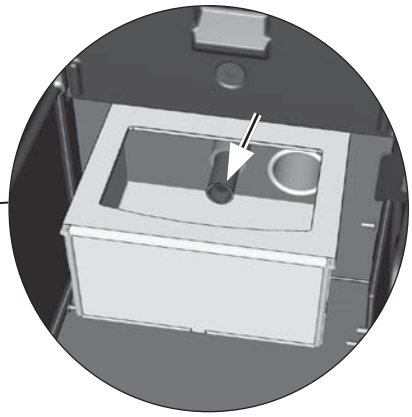

The images are for illustration purposes.

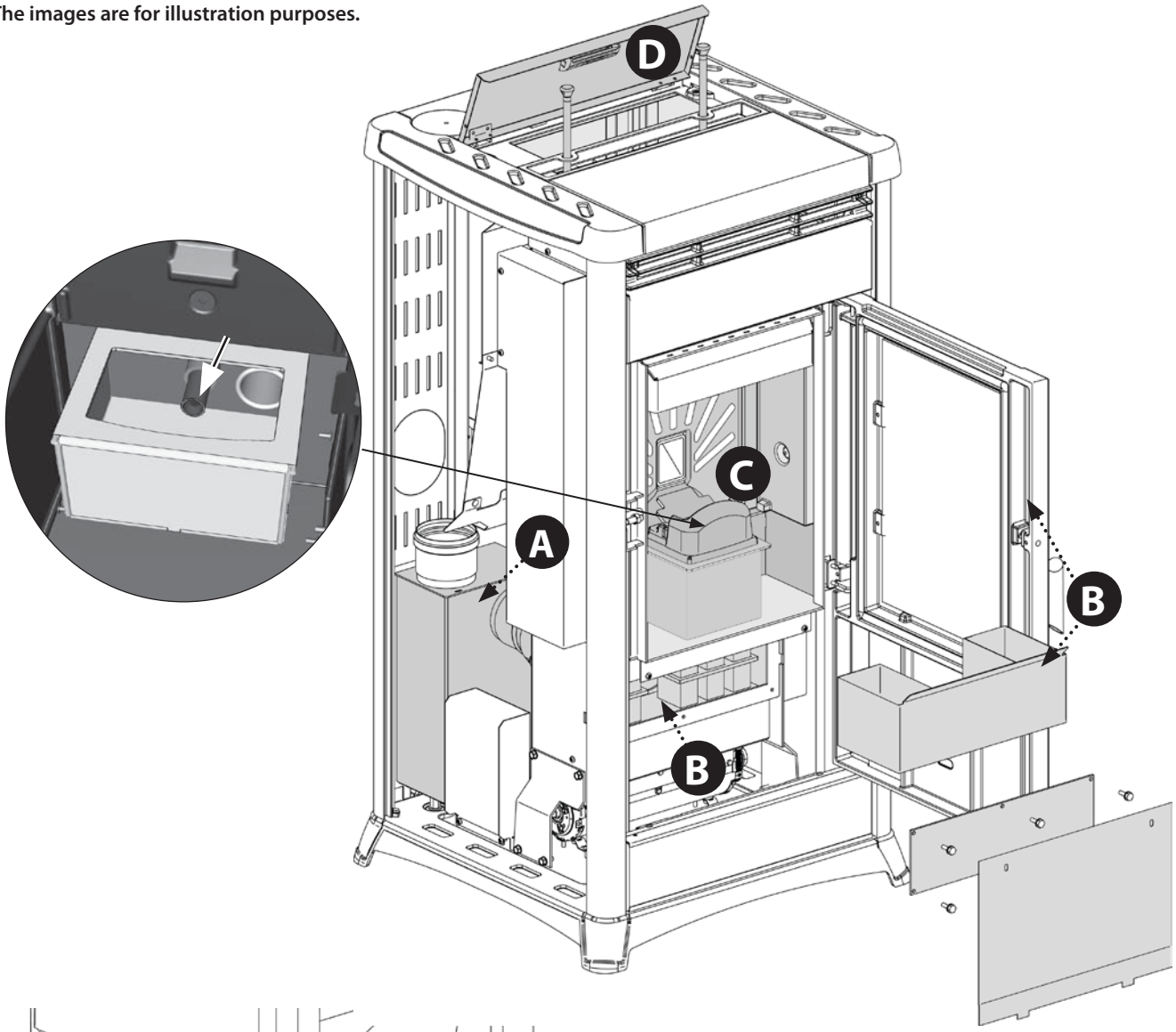

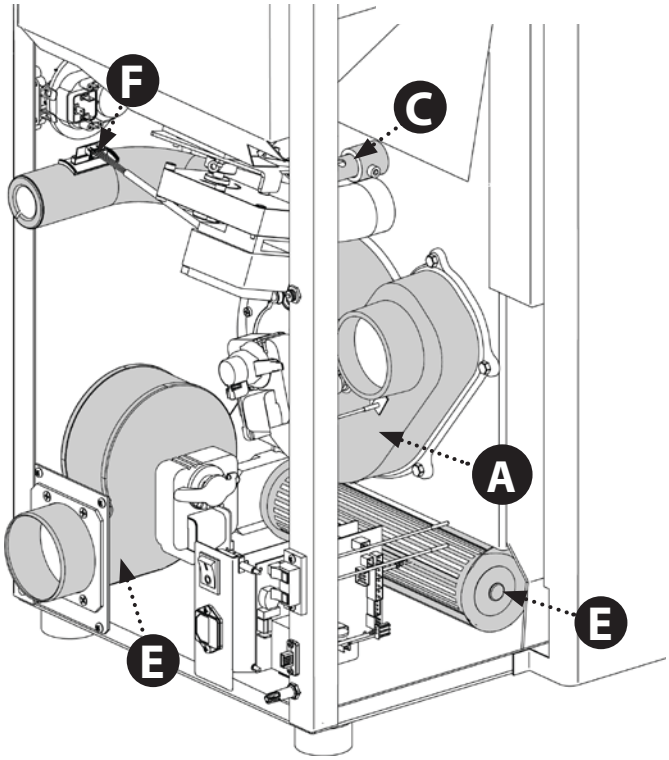

A	Fumes motor (disassembly and cleaning and fumes pipe), new silicone in required points	✓
B	Inspection of gaskets, ash drawer and burn pot door (replace them and apply silicone where required)	✓
C	Combustion chamber (total cleaning of the entire chamber) and ignition plug tube cleaning	✓
D	Tank (complete emptying and cleaning).	✓
E	Room air fan disassembly and removal of dust and any pellet debris	✓
F	Air intake pipe inspection and of flow sensor cleaning	✓

DISPLAYS		
DISPLAY	**REASON**	**SOLUTION**
OFF	Stove off	-
START	The start-up phase is in progress	-
PELLET FEEDING	The feeding of the pellet during the ignition phase is in progress	
IGNITION	The ignition phase is in progress	-
START-UP	The start-up phase is in progress	-
WORK	The normal work phase is in progress	-
MODULATION	The stove is modulating	-
BURN POT CLEANING	The automatic burn pot cleaning is in progress.	The automatic burn pot cleaning (not in 1st power) is performed at pre-established intervals of continued working.
FINAL CLEANING	When the stove is switched-off, final cleaning is in progress. The final cleaning phase lasts about 10 minutes.	
STAND BY	Stove off due to temperature reached and in stand-by for re-ignition.	To deactivate the STAND-BY function see the specific chapter.
STAND BY EXT	Stove off due to an external thermostat, waiting for re-ignition	To deactivate the STAND-BY function see the specific chapter.
COOLING STAND-BY	A new ignition is attempted when the stove has just been switched-off	When the stove switches off, it is necessary to wait for the complete shutdown of the fumes motor before cleaning the burn pot. The stove can only be re-ignited when these operations have been performed.
COOL. STDBY - BLACK OUT	The stove is cooling due to black out	On completion of the cooling phase, it will re-ignite automatically.
LOW	Room thermostat set at minimum value.	In this way the stove only works at 1st power independently from the power set. To exit this function just raise the room temperature using button 4 and then key 2.
HOT	Set room thermostat set at maximum value.	The stove works at set start, without ever modulating. To escape this function just lower the set temperature using key 4 and then key 1.
SERVICE	When this message appears, contact the authorised technician for ordinary cleaning of the appliance. If cleaning is not performed, the message will be displayed at every ignition but without interrupting normal stove operation.	

ALARMS		
DISPLAY	**EXPLANATION**	**SOLUTION**
⚠	Indicates the presence of an alarm.	On: indicates the presence of an alarm Off: indicates the absence of alarms Flashing: indicates the deactivation of the depression sensor. The alarm can be reset by pressing key 1 for 3 seconds only if the fumes motor has stopped and if 15 minutes have passed from displaying the same alarm.
FUMES FAILURE	Fault related to the flue gas exhaust motor.	The restoration operations must be carried out by an authorised technician.
FUMES PROBE	Fault related to the fumes probe.	The restoration operations must be carried out by an authorised technician.
FUMES OVERTEMP AL.	The flue gas temperature has exceeded 310°C	Check the pellet flow (see "Pellet feed adjustment"). Check that the machine is clean, including the fumes route. Do not rest cloths on the machine. Other restoration operations must be carried out by an authorised technician.
CLEAN CHECK UP 1 - 2 **(1 = IN BURNING PHASE)** **(2 = IN OPERANT PHASE)**	The combustion chamber or burn pot bottom are dirty. The door is not closed correctly. The ash pan is not closed correctly. The depression sensor is faulty. The flue exhaust pipe is blocked. Incorrect installation	Make sure the holes at the burn pot bottom are completely free. Check cleanliness of the fumes pipe and the combustion chamber. Check hermetic door closure. Check hermetic closure of the ash drawer. Other restoration operations must be carried out by an authorised technician.
DEPR ALARM	The mechanical depression sensor has tripped	Contact after-sales centre
NO IGNITION	The pellet feed-box is empty. Pellet feed calibration inadequate. Incorrect installation	Check for the presence of pellets in the feed-box. Adjust the pellet flow (see "Pellet feed adjustment"). Check the procedures described in the "Ignition" chapter. Other restoration operations must be carried out by an authorised technician.
NO IGNITION BLACK OUT	No power during the ignition phase.	Switch the stove to OFF using key 1 and repeat the procedure described in the "Ignition" chapter. Other restoration operations must be carried out by an authorised technician.
NO PELLETS	In the work phase, the t° of the flue gases has dropped below factory parameters	Check for the presence of pellets in the feed-box. Regulate the pellet flow. Other restoration operations must be carried out by an authorised technician.
COOLING STAND-BY	Attempt to release the alarm with stove still in cooling mode.	Every time the stove displays one of the alarms listed above it will switch-off automatically. The stove will block any release attempt during this phase, showing the alarm itself and STAND-BY alternately on the display. The alarm can be reset by pressing key 1 for 3 seconds only if the fumes motor has stopped and if 15 minutes have passed from displaying the same alarm.
DEPR SENSOR DAMAGE	Component disconnected or faulty	Contact after-sales assistance
COMMAND AUGER ALARM	Abnormal functioning of pellet feeding	Contact after-sales assistance

GUARANTEE TERMS

1. Extraflame S.p.A. products are guaranteed, within the European community, for 24 months from the date of purchase.
Purchase has to be proved by means of a valid fiscal document issued by the seller (receipt, invoice or shipment document) identifying the purchased product and its purchase and/or delivery date.

WARNING: This conventional guarantee does not replace the guarantee regulated by the European legislation on consumer rights.

The conventional guarantee is only applicable to the Italian region and to those areas, within the European Community, where the Authorised Technical Assistance Centres are active (see the www.lanordica-extraflame.com website)
It is also limited to the state of residence of the consumer, which must coincide with the premises and/or registered office of the seller of the Extraflame S.p.A. product
These regulations do not apply if the product is purchased within commercial, entrepreneurial, or professional circumstances. In these cases the product guarantee will be limited to a period of 12 months from the date of purchase.

ITALIAN GUARANTEE

What must be done if there is a product malfunction:
Consult the instructions manual to make sure the malfunction cannot be solved by using the product correctly. Make sure the malfunction is included in those covered by the guarantee; otherwise the cost of the intervention will be borne entirely by the consumer. When requesting the intervention of the Assistance service at the Authorised Assistance Centre, always specify: - type of malfunction - model of the appliance - complete address - phone number

EUROPEAN GUARANTEE

What must be done if there is a product malfunction:
Consult the instructions manual to make sure the malfunction cannot be solved by using the product correctly. Make sure the malfunction is included in those covered by the guarantee; otherwise the cost of the intervention will be borne entirely by the consumer. Request the intervention of the Assistance service or the address of the Authorised Technical Assistance Centre to the seller; always specify: type of malfunction, model of the appliance, complete address and phone number

If the malfunction arises in the first 6 months of the product's life, the consumer has the right to have the product repaired with no expense. From the seventh to the twenty-fourth month, if a malfunction arises, the consumer will bear the cost of the call, while the seller will pay for the manpower and for any spare parts used.

2. If the malfunction is linked to external events and/or conditions such as, including but not limited to, insufficient capacity of the systems; wrong installation and/or maintenance by the personnel which hasn't got the skills prescribed by the laws of the country of residence of the consumer; negligence; inability to use the product and wrong maintenance by the consumer, with respect to what is reported and recommended by the instructions manual of the product, which is part of the sales contract, this guarantee will be void.
Damage to the product that cannot be related to manufacturing defects are also not included in this guarantee. Similarly are excluded defects related to incorrect operation of the flue, according to the legislation in force in the country at the moment of purchase. Other exclusions include all product defects due to carelessness, accidental breakdown, tampering and/or damage during transport (scratches, dents, etc.), interventions carried out by unauthorised personnel and further damage caused by incorrect interventions by the consumer trying to arrange the initial malfunction.
The following consumables are excluded by the guarantee: gaskets, ceramic or tempered glasses, cast iron grilles or coatings, refractory materials (e.g. Nordiker or others), painted, chrome-plated or golden parts, majolica ware, handles, the brazier and its related components. For Idro products the heat exchanger is not covered by the guarantee if a suitable condensation-proof circuit is not set up to ensure a return temperature of the device of at least 55°C. The guarantee excludes all the external components on which the consumer can directly operate during use and/or maintenance or that can be subject to wear and/or rust and stains on steel due to aggressive detergents.
If malfunctions are signalled which are not later confirmed during check by an authorised technician, the cost of the intervention will be borne entirely by the consumer.

3. If it is not possible to restore product conformity by repairing it, the product/component will be replaced, the guarantee expiration date and conditions will remain the same established when the product/component to be replaced has been purchased.

4. Extraflame S.p.A. cannot be held liable for injury or damage which may - either directly or indirectly - be caused to persons, animals and property ensuing from failure to observe all the instructions provided in the relevant instruction manual and the warnings regarding installation, use and maintenance of the product, that can also be downloaded on the website.

5. Interventions for adjusting and/or regulating the product for the type of fuel or other reasons are excluded by the guarantee.

6. If the product is repaired in one of the Authorised Technical Assistance Centres indicated by Extraflame S.p.A. and if the product is replaced, transport will be free of charge. If the technician can repair the product at the user's place of residence and they refuse, transport to the workshop and redelivery will be paid by the consumer.

7. After the 24 months of the guarantee have elapsed any repair intervention cost will be completely borne by the consumer.

8. In the case of disputes the only competent court is that of the Extraflame S.p.A. registered office - (Vicenza-Italy)

ADDITIONAL WARNINGS

- Only use the fuel recommended by the manufacturer. The product must not be used as an incinerator.
- Do not use the product as a ladder or supporting structure.
- Do not place laundry on the product to dry it. Any clothes-horse or similar objects must be kept at due distance from the product. Danger of fire or damage to the coating.
- The user is fully liable for any incorrect use of the product. The manufacturer bears no civil or criminal liability for incorrect use.
- Unauthorised tampering of any nature or replacement of spare parts of the product with non-original parts may endanger the operator and the manufacturer bears no civil or criminal liability for this.
- Large parts of the surface of the product can get very hot (door, handle, glass, smoke outlet pipes, etc.). Please therefore avoid coming into contact with these parts without wearing suitable protective clothing or using appropriate measures, such as heat protective gloves.
- DO NOT use the product with the door open or if the glass is broken.
- The product must be electrically connected to a system equipped with an operational earthing system.
- Turn off the product in the event of a failure or malfunctioning.
- Unburned pellets that build up in the burner following each failed start-up must be removed before attempting to start up the product again. Make sure that the burner is clean and correctly positioned before starting it up again.
- Do not wash the product with water. Water may penetrate into the unit and cause faults in the electrical insulation. This can cause electric shocks.
- Installations not complying with the regulations in force, as well as incorrect use and failure to comply with the maintenance scheduled by the manufacturer, will invalidate the guarantee.

Extraflame®

Riscaldamento a Pellet

Extraflame S.p.A. Via Dell'Artigianato, 12 36030 - MONTECCHIO PRECALCINO (VI) - ITALY
☏ +39.0445.865911 - 🖷 +39.0445.865912 - ✉ info@extraflame.it - 💻 www.lanordica-extraflame.com

MADE IN ITALY
design & production

TO FIND THE SERVICE CENTRE NEAREST TO YOU CONTACT YOUR DEALER OR CONSULT THE SITE WWW.LANORDICA-EXTRAFLAME.COM

The manufacturer reserves the right to vary the characteristics and the data reported in this pamphlet at any moment and without notice, in order to improve its products.
This manual, therefore, cannot be regarded as a contract towards other parties.

30/12/2016 *004276735-000_MAN_UT_STUFE_PELLET_596P_[EXT]*