trovaprezzi.it

Questo manuale d'istruzione è fornito da trovaprezzi.it. Scopri tutte le offerte per Makita DF012DSE o cerca il tuo prodotto tra le migliori offerte di Elettroutensili

ENGLISH: Original instructions

INSTRUCTION MANUAL

Cordless Driver Drill

DF012D

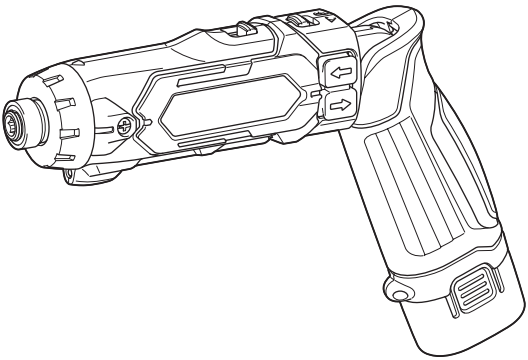

Read before use.

SPECIFICATIONS

Model:		DF012D
Drilling capacities	Steel	5 mm
	Wood	6 mm
Fastening capacities	Wood screw	ø3.8 mm x 45 mm
	Machine screw	M5
No load speed	High (2)	650 min^{-1}
	Low (1)	200 min^{-1}
Overall length	With straight shape	273 mm
	With pistol shape	218 mm
Rated voltage		D.C. 7.2 V
Battery cartridge		BL0715
Net weight		0.53 kg

- Due to our continuing program of research and development, the specifications herein are subject to change without notice.
- Specifications and battery cartridge may differ from country to country.
- Weight, with battery cartridge, according to EPTA-Procedure 01/2014

Symbols

The following show the symbols used for the equipment. Be sure that you understand their meaning before use.

	Read instruction manual.
Cd Ni-MH Li-ion	Only for EU countries Do not dispose of electric equipment or battery pack together with household waste material! In observance of the European Directives, on Waste Electric and Electronic Equipment and Batteries and Accumulators and Waste Batteries and Accumulators and their implementation in accordance with national laws, electric equipment and batteries and battery pack(s) that have reached the end of their life must be collected separately and returned to an environmentally compatible recycling facility.

Intended use

The tool is intended for drilling and screw driving in wood, metal and plastic.

Noise

The typical A-weighted noise level determined according to EN60745:
Sound pressure level (L_{pA}) : 70 dB(A) or less
Uncertainty (K) : 3 dB(A)

The noise level under working may exceed 80 dB (A).

⚠*WARNING:* Wear ear protection.

Vibration

The vibration total value (tri-axial vector sum) determined according to EN60745:
Work mode: drilling into metal
Vibration emission ($a_{h,D}$) : 2.5 m/s^2 or less
Uncertainty (K) : 1.5 m/s^2

NOTE: The declared vibration emission value has been measured in accordance with the standard test method and may be used for comparing one tool with another.

NOTE: The declared vibration emission value may also be used in a preliminary assessment of exposure.

⚠***WARNING:*** The vibration emission during actual use of the power tool can differ from the declared emission value depending on the ways in which the tool is used.

⚠***WARNING:*** Be sure to identify safety measures to protect the operator that are based on an estimation of exposure in the actual conditions of use (taking account of all parts of the operating cycle such as the times when the tool is switched off and when it is running idle in addition to the trigger time).

EC Declaration of Conformity

For European countries only

The EC declaration of conformity is included as Annex A to this instruction manual.

SAFETY WARNINGS

General power tool safety warnings

⚠*WARNING:* **Read all safety warnings and all instructions.** Failure to follow the warnings and instructions may result in electric shock, fire and/or serious injury.

Save all warnings and instructions for future reference.

The term "power tool" in the warnings refers to your mains-operated (corded) power tool or battery-operated (cordless) power tool.

Work area safety

1. **Keep work area clean and well lit.** Cluttered or dark areas invite accidents.
2. **Do not operate power tools in explosive atmospheres, such as in the presence of flammable liquids, gases or dust.** Power tools create sparks which may ignite the dust or fumes.
3. **Keep children and bystanders away while operating a power tool.** Distractions can cause you to lose control.

Electrical Safety

1. **Power tool plugs must match the outlet. Never modify the plug in any way. Do not use any adapter plugs with earthed (grounded) power tools.** Unmodified plugs and matching outlets will reduce risk of electric shock.
2. **Avoid body contact with earthed or grounded surfaces, such as pipes, radiators, ranges and refrigerators.** There is an increased risk of electric shock if your body is earthed or grounded.
3. **Do not expose power tools to rain or wet conditions.** Water entering a power tool will increase the risk of electric shock.
4. **Do not abuse the cord. Never use the cord for carrying, pulling or unplugging the power tool. Keep cord away from heat, oil, sharp edges or moving parts.** Damaged or entangled cords increase the risk of electric shock.
5. **When operating a power tool outdoors, use an extension cord suitable for outdoor use.** Use of a cord suitable for outdoor use reduces the risk of electric shock.
6. **If operating a power tool in a damp location is unavoidable, use a residual current device (RCD) protected supply.** Use of an RCD reduces the risk of electric shock.

Personal Safety

1. **Stay alert, watch what you are doing and use common sense when operating a power tool. Do not use a power tool while you are tired or under the influence of drugs, alcohol or medication.** A moment of inattention while operating power tools may result in serious personal injury.
2. **Use personal protective equipment. Always wear eye protection.** Protective equipment such as a dust mask, non-skid safety shoes, hard hat or hearing protection used for appropriate conditions will reduce personal injuries.
3. **Prevent unintentional starting. Ensure the switch is in the off-position before connecting to power source and/or battery pack, picking up or carrying the tool.** Carrying power tools with your finger on the switch or energising power tools that have the switch on invites accidents.
4. **Remove any adjusting key or wrench before turning the power tool on.** A wrench or a key left attached to a rotating part of the power tool may result in personal injury.
5. **Do not overreach. Keep proper footing and balance at all times.** This enables better control of the power tool in unexpected situations.
6. **Dress properly. Do not wear loose clothing or jewellery. Keep your hair, clothing, and gloves away from moving parts.** Loose clothes, jewellery or long hair can be caught in moving parts.
7. **If devices are provided for the connection of dust extraction and collection facilities, ensure these are connected and properly used.** Use of dust collection can reduce dust-related hazards.

Power tool use and care

1. **Do not force the power tool. Use the correct power tool for your application.** The correct power tool will do the job better and safer at the rate for which it was designed.
2. **Do not use the power tool if the switch does not turn it on and off.** Any power tool that cannot be controlled with the switch is dangerous and must be repaired.
3. **Disconnect the plug from the power source and/or the battery pack from the power tool before making any adjustments, changing accessories, or storing power tools.** Such preventive safety measures reduce the risk of starting the power tool accidentally.
4. **Store idle power tools out of the reach of children and do not allow persons unfamiliar with the power tool or these instructions to operate the power tool.** Power tools are dangerous in the hands of untrained users.
5. **Maintain power tools. Check for misalignment or binding of moving parts, breakage of parts and any other condition that may affect the power tool's operation. If damaged, have the power tool repaired before use.** Many accidents are caused by poorly maintained power tools.
6. **Keep cutting tools sharp and clean.** Properly maintained cutting tools with sharp cutting edges are less likely to bind and are easier to control.
7. **Use the power tool, accessories and tool bits etc. in accordance with these instructions, taking into account the working conditions and the work to be performed.** Use of the power tool for operations different from those intended could result in a hazardous situation.

Battery tool use and care

1. **Recharge only with the charger specified by the manufacturer.** A charger that is suitable for one type of battery pack may create a risk of fire when used with another battery pack.
2. **Use power tools only with specifically designated battery packs.** Use of any other battery packs may create a risk of injury and fire.

3. **When battery pack is not in use, keep it away from other metal objects, like paper clips, coins, keys, nails, screws or other small metal objects, that can make a connection from one terminal to another.** Shorting the battery terminals together may cause burns or a fire.
4. **Under abusive conditions, liquid may be ejected from the battery; avoid contact. If contact accidentally occurs, flush with water. If liquid contacts eyes, additionally seek medical help.** Liquid ejected from the battery may cause irritation or burns.

Service

1. **Have your power tool serviced by a qualified repair person using only identical replacement parts.** This will ensure that the safety of the power tool is maintained.
2. **Follow instruction for lubricating and changing accessories.**
3. **Keep handles dry, clean and free from oil and grease.**

Cordless driver drill safety warnings

1. **Use auxiliary handle(s), if supplied with the tool.** Loss of control can cause personal injury.
2. **Hold power tool by insulated gripping surfaces, when performing an operation where the cutting accessory may contact hidden wiring.** Cutting accessory contacting a "live" wire may make exposed metal parts of the power tool "live" and could give the operator an electric shock.
3. **Hold power tool by insulated gripping surfaces, when performing an operation where the fastener may contact hidden wiring.** Fasteners contacting a "live" wire may make exposed metal parts of the power tool "live" and could give the operator an electric shock.
4. **Always be sure you have a firm footing. Be sure no one is below when using the tool in high locations.**
5. **Hold the tool firmly.**
6. **Keep hands away from rotating parts.**
7. **Do not leave the tool running. Operate the tool only when hand-held.**
8. **Do not touch the drill bit or the workpiece immediately after operation; they may be extremely hot and could burn your skin.**
9. **Some material contains chemicals which may be toxic. Take caution to prevent dust inhalation and skin contact. Follow material supplier safety data.**

SAVE THESE INSTRUCTIONS.

⚠*WARNING:* **DO NOT let comfort or familiarity with product (gained from repeated use) replace strict adherence to safety rules for the subject product. MISUSE or failure to follow the safety rules stated in this instruction manual may cause serious personal injury.**

Important safety instructions for battery cartridge

1. **Before using battery cartridge, read all instructions and cautionary markings on (1) battery charger, (2) battery, and (3) product using battery.**
2. **Do not disassemble battery cartridge.**
3. **If operating time has become excessively shorter, stop operating immediately. It may result in a risk of overheating, possible burns and even an explosion.**
4. **If electrolyte gets into your eyes, rinse them out with clear water and seek medical attention right away. It may result in loss of your eyesight.**
5. **Do not short the battery cartridge:**
   (1) **Do not touch the terminals with any conductive material.**
   (2) **Avoid storing battery cartridge in a container with other metal objects such as nails, coins, etc.**
   (3) **Do not expose battery cartridge to water or rain.**
   A battery short can cause a large current flow, overheating, possible burns and even a breakdown.
6. **Do not store the tool and battery cartridge in locations where the temperature may reach or exceed 50 °C (122 °F).**
7. **Do not incinerate the battery cartridge even if it is severely damaged or is completely worn out. The battery cartridge can explode in a fire.**
8. **Be careful not to drop or strike battery.**
9. **Do not use a damaged battery.**
10. **The contained lithium-ion batteries are subject to the Dangerous Goods Legislation requirements.** For commercial transports e.g. by third parties, forwarding agents, special requirement on packaging and labeling must be observed.
    For preparation of the item being shipped, consulting an expert for hazardous material is required. Please also observe possibly more detailed national regulations.
    Tape or mask off open contacts and pack up the battery in such a manner that it cannot move around in the packaging.
11. **Follow your local regulations relating to disposal of battery.**

SAVE THESE INSTRUCTIONS.

⚠*CAUTION:* **Only use genuine Makita batteries.** Use of non-genuine Makita batteries, or batteries that have been altered, may result in the battery bursting causing fires, personal injury and damage. It will also void the Makita warranty for the Makita tool and charger.

Tips for maintaining maximum battery life

1. **Charge the battery cartridge before completely discharged. Always stop tool operation and charge the battery cartridge when you notice less tool power.**
2. **Never recharge a fully charged battery cartridge. Overcharging shortens the battery service life.**
3. **Charge the battery cartridge with room temperature at 10 °C - 40 °C (50 °F - 104 °F). Let a hot battery cartridge cool down before charging it.**

FUNCTIONAL DESCRIPTION

⚠*CAUTION:* Always be sure that the tool is switched off and the battery cartridge is removed before adjusting or checking function on the tool.

Installing or removing battery cartridge

⚠*CAUTION:* Always switch off the tool before installing or removing of the battery cartridge.

⚠*CAUTION:* Hold the tool and the battery cartridge firmly when installing or removing battery cartridge. Failure to hold the tool and the battery cartridge firmly may cause them to slip off your hands and result in damage to the tool and battery cartridge and a personal injury.

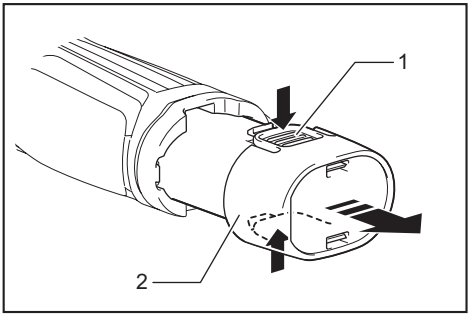

► **1.** Button **2.** Battery cartridge

To remove the battery cartridge, withdraw it from the tool while pressing the buttons on both sides of the cartridge.

To install the battery cartridge, align the tongue on the battery cartridge with the groove in the housing and slip it into place.

⚠*CAUTION:* Always insert it until it locks in place with a little click. If not, it may accidentally fall out of the tool, causing injury to you or someone around you.

⚠*CAUTION:* Do not install the battery cartridge forcibly. If the cartridge does not slide in easily, it is not being inserted correctly.

Battery protection system

The tool is equipped with a battery protection system. This system automatically cuts off power to the motor to extend battery life.
The tool will automatically stop during operation if the tool and/or battery are placed under the following condition:

Low battery voltage:
The remaining battery capacity is too low and the tool will not operate. If you turn the tool on, the motor runs again but stops soon. In this situation, remove and recharge the battery.

Lock lever

⚠*CAUTION:* When not operating the tool, always set the lock lever in the locked position B.

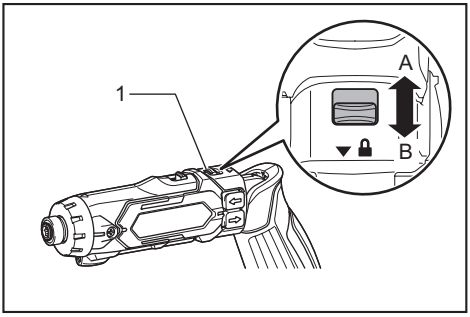

► **1.** Lock lever

When the lock lever is in the locked position B, the switch cannot be actuated.
When the lock lever is in the unlocked position A, the switch can be actuated.

Switch action

⚠*CAUTION:* Before installing the battery cartridge into the tool, always check to see that the switch actuates properly and returns to the "OFF" position when released.

⚠*CAUTION:* Always check the direction of rotation before operation.

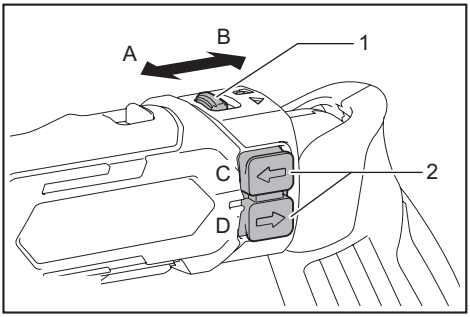

► **1.** Lock lever **2.** Switch

To start the tool, first move the lock lever to the unlocked position A to release the switch. And then simply push the switch on the ⇦ C side for the clockwise rotation and the ⇨ D side for the counterclockwise rotation. Release the switch to stop.

***NOTICE:* Change the direction only after the tool comes to a complete stop.** Changing the direction of rotation before the tool stops may damage the tool.

Speed change

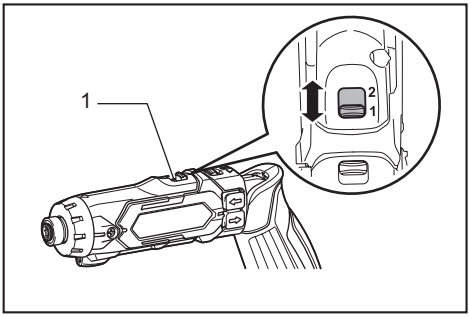

► **1.** Speed change lever

⚠*CAUTION:* Always set the speed change lever fully to the correct position. If you operate the tool with the speed change lever positioned halfway between the "1" side and "2" side, the tool may be damaged.

⚠*CAUTION:* Do not use the speed change lever while the tool is running. The tool may be damaged.

Position of speed change lever	Speed	Torque	Applicable operation
1	Low	High	Heavy loading operation
2	High	Low	Light loading operation

To change the speed, switch off the tool first. Select the "2" side for high speed or "1" for low speed but high torque. Be sure that the speed change lever is set to the correct position before operation.
If the tool speed is coming down extremely during the operation with "2", slide the lever to the "1" and restart the operation.

Adjusting the fastening torque

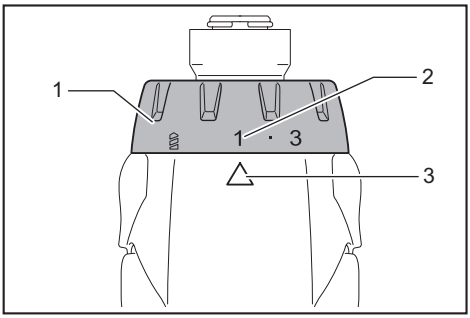

► **1.** Adjusting ring **2.** Graduation **3.** Arrow

The fastening torque can be adjusted in 22 levels by turning the adjusting ring. Align the graduations with the arrow on the tool body. You can get the minimum fastening torque at 1 and maximum torque at marking.
The clutch will slip at various torque levels when set at the number 1 to 21. The clutch does not work at the marking.
Before actual operation, drive a trial screw into your material or a piece of duplicate material to determine which torque level is required for a particular application.

NOTE: See the following chart for the relation between the number of torque setting and fastening torque rate.

The fastening torque rate will be different depends on materials. Make a test fastening to get the desired torque before operation.

Guideline for clutch auto stop

Work range of clutch auto-stop		Increments on adjusting ring for fastening torque	Fastening torque
High	Low		
✓	✓	1	Approx. 0.3 N•m (Approx. 3 Kgf•cm)
✓	✓	5	Approx. 0.82 N•m (Approx. 8.4 Kgf•cm)
✓	✓	9	Approx. 1.35 N•m (Approx. 13.8 Kgf•cm)
-	✓	13	Approx. 1.88 N•m (Approx. 19.2 Kgf•cm)
-	✓	17	Approx. 2.41N•m (Approx. 24.6 Kgf•cm)
-	✓	21	Approx. 2.9 N•m (Approx. 30 Kgf•cm)
-	-		At low speed, approx. 8 N•m (Approx. 81.6 Kgf•cm)
-	-		At high speed, approx. 1.5 N•m (Approx. 14.7 Kgf•cm)

When driving machine screws	Increments	Guideline for machine screw diameter
	1 - 3	2.5 mm
	4 - 8	3 mm
	9 - 18	4 mm
	19 - 21	5 mm

Lighting up the front lamp

⚠*CAUTION:* Do not look in the light or see the source of light directly.

To turn on the light, slide the lamp switch to the A position. To turn off the light, slide the lamp switch to B position.
Even if you leave the lamp on, the light will automatically turn off after 5 minutes.

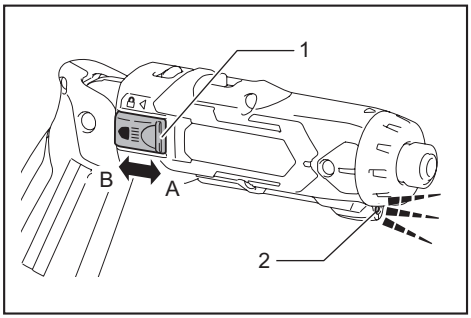

► **1.** Lamp switch **2.** Lamp

NOTE: The lamp signals by flickering during use when the battery power is almost used up.

At this time, recharge the battery or replace the battery with a fully charged one.

ASSEMBLY

⚠*CAUTION:* Always be sure that the tool is switched off and the battery cartridge is removed before carrying out any work on the tool.

Installing or removing driver bit/ socket bit

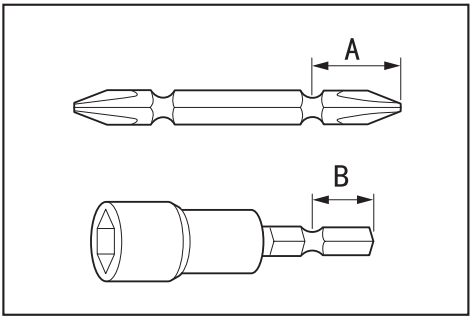

Use only driver bit/socket bit that has inserting portion shown in the figure. Do not use any other driver bit/ socket bit.

For tool with shallow driver bit hole

A=12mm B=9mm	Use only these type of driver bit. Follow the procedure 1. (Note) Bit-piece is not necessary.

For tool with deep driver bit hole

A=17mm B=14mm	To install these types of driver bits, follow the procedure 1.
A=12mm B=9mm	To install these types of driver bits, follow the procedure 2. (Note) Bit-piece is necessary for installing the bit.

Procedure 1

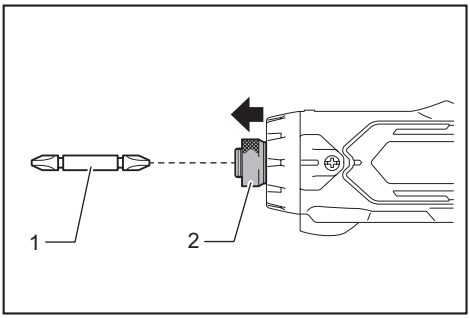

► **1.** Driver bit **2.** Sleeve

To install the driver bit, pull the sleeve in the direction of the arrow and insert the driver bit into the sleeve as far as it will go.
Then release the sleeve to secure the driver bit.

Procedure 2

In addition to **Procedure 1**, insert the bit-piece into the sleeve with its pointed end facing in.

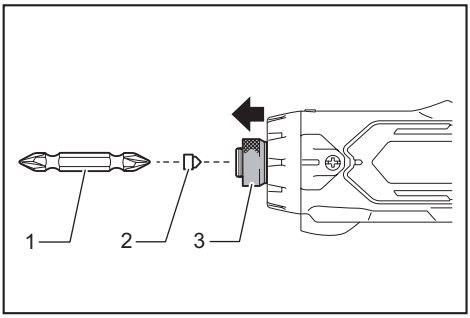

► **1.** Driver bit **2.** Bit-piece **3.** Sleeve

To remove the driver bit, pull the sleeve in the direction of the arrow and pull the driver bit out.

NOTE: If the driver bit is not inserted deep enough into the sleeve, the sleeve will not return to its original position and the driver bit will not be secured. In this case, try re-inserting the bit according to the instructions above.

NOTE: After inserting the driver bit, make sure that it is firmly secured. If it comes out, do not use it.

OPERATION

⚠*CAUTION:* **When bending the tool to use in the pistol shape or straightening to use in the straight shape, do not hold the bendable part of the tool.** Failure to do so may cause your hand and fingers to be pinched and injured by this part.

The tool can be used in two ways; a straight shape and a pistol shape which are selectable according to the conditions of workplace and screwdriving.

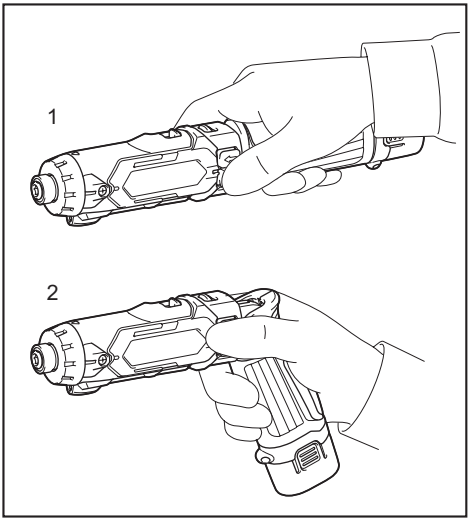

► **1.** Straight shape **2.** Pistol shape

Screwdriving operation

⚠*CAUTION:* **Adjust the adjusting ring to the proper torque level for your work.**

⚠*CAUTION:* **Make sure that the driver bit is inserted straight in the screw head, or the screw and/or driver bit may be damaged.**

Place the point of the driver bit in the screw head and apply pressure to the tool. Start the tool slowly and then increase the speed gradually. Release the switch trigger as soon as the clutch cuts in.

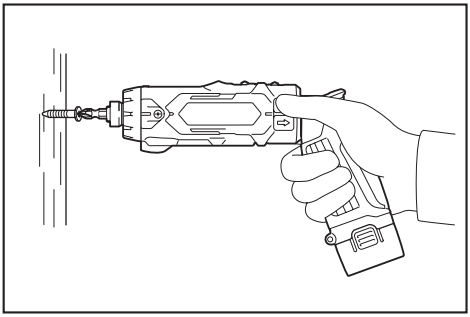

NOTE: When driving wood screw, pre-drill a pilot hole 2/3 the diameter of the screw. It makes driving easier and prevents splitting of the workpiece.

Drilling operation

First, turn the adjusting ring so that the arrow points to the marking. Then proceed as follows.

Drilling in wood

When drilling in wood, the best results are obtained with wood drills equipped with a guide screw. The guide screw makes drilling easier by pulling the drill bit into the workpiece.

Drilling in metal

To prevent the drill bit from slipping when starting a hole, make an indentation with a center-punch and hammer at the point to be drilled. Place the point of the drill bit in the indentation and start drilling.
Use a cutting lubricant when drilling metals. The exceptions are iron and brass which should be drilled dry.

CAUTION: **Pressing excessively on the tool will not speed up the drilling.** In fact, this excessive pressure will only serve to damage the tip of your drill bit, decrease the tool performance and shorten the service life of the tool.

CAUTION: **Hold the tool firmly and exert care when the drill bit begins to break through the workpiece.** There is a tremendous force exerted on the tool/drill bit at the time of hole break through.

CAUTION: **A stuck drill bit can be removed simply by setting the reversing switch to reverse rotation in order to back out. However, the tool may back out abruptly if you do not hold it firmly.**

CAUTION: **Always secure workpieces in a vise or similar hold-down device.**

CAUTION: **If the tool is operated continuously until the battery cartridge has discharged, allow the tool to rest for 15 minutes before proceeding with a fresh battery.**

Using the tool as a hand screwdriver

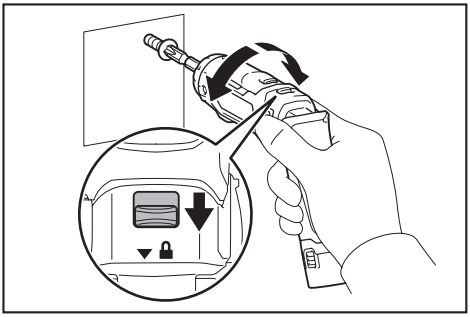

Switch off the tool.
Move the lock lever to the locked position .
Turn the tool.

NOTICE: Use the tool with a fastening torque less than 5 N•m (50 kgf•cm).

NOTICE: Do not use the tool for work requiring excessive force, such as tightening bolt M6 or bolts greater than M6 or removing rusted screws.

NOTE: This use is convenient for checking the screwdriving.

MAINTENANCE

CAUTION: **Always be sure that the tool is switched off and the battery cartridge is removed before attempting to perform inspection or maintenance.**

NOTICE: **Never use gasoline, benzine, thinner, alcohol or the like. Discoloration, deformation or cracks may result.**

To maintain product SAFETY and RELIABILITY, repairs, any other maintenance or adjustment should be performed by Makita Authorized or Factory Service Centers, always using Makita replacement parts.

OPTIONAL ACCESSORIES

⚠*CAUTION:* **These accessories or attachments are recommended for use with your Makita tool specified in this manual.** The use of any other accessories or attachments might present a risk of injury to persons. Only use accessory or attachment for its stated purpose.

If you need any assistance for more details regarding these accessories, ask your local Makita Service Center.

- Drill bits
- Driver bits
- Socket bits
- Bit piece
- Plastic carrying case
- Makita genuine battery and charger

NOTE: Some items in the list may be included in the tool package as standard accessories. They may differ from country to country.

Makita Europe N.V. Jan-Baptist Vinkstraat 2,
3070 Kortenberg, Belgium

Makita Corporation 3-11-8, Sumiyoshi-cho,
Anjo, Aichi 446-8502 Japan

www.makita.com

885561-225
EN
20161028